Jan

Operator's Manual



LANCER ORGANICO 20,000 TM

Congratulations!

Congratulations, you have purchased a product which is a successful result of more than two decades of experience in distributors.

The Lancer Organico 20,000 TM meets your agronomic needs with high yield, economy, ease of operation and perfection in the distribution of organic fertilizers (cattle, pigs and poultry manure) and powder products (plaster and limestone).

Precision in dosage and uniformity of application are essential factors to have greater productivity and profitability in the field. With this in mind, the Lancer Organico line was developed with a dismantlable carbon steel structure.

All equipment developed by Jan is exhaustively field-tested, in order to meet your requirements. Therefore, this Manual is another effort on our part to ensure your satisfaction with the product, allowing you to enjoy, in a practical and efficient way all the benefits that the Lancer offers.

In addition, this manual provides instructions for the correct preventive maintenance and conservation of the equipment, as well as instructions on how to proceed when Technical Assistance is required.

Before operating the Lancer for the first time, carefully read all safety recommendations.

Our efforts do not stop there, as we have a Technical Assistance Department always ready to assist you: see chapter 9.

Contact us whenever necessary.

IMPLEMENTOS AGRÍCOLAS JAN S/A

NOTES:

- *Due to its policy of ongoing product improvement, Jan reserves the right to make changes and improvements without this implying any obligation regarding previously manufactured products. Therefore, the content of this manual is updated until the date it was printed, and may suffer changes without prior notice.*
- *The purpose of this manual is to provide instructions covering the implement/machine in its entirety, with accessories and variations. Therefore, Jan assumes no responsibility regarding the configuration of the implement just acquired, that is, some items described in this manual may not be present on your implement/machine.*
- *Some illustrations may show details slightly different from those found on your implement/machine, as they were obtained from prototype machines, without this affecting the understanding of the instructions.*
- *Some pictures shown in this Manual were obtained by removing the protections from the implement/machine in order to make identification easier. However, do not operate your Lancer without such protections.*
- *Work while respecting nature: do not dispose of waste, oils, filters, batteries, fuels and other contaminants in the environment. These practices harm your health, your family's health and even future generations. Send used products for proper recycling. The environment will thank you.*

1 - Introduction **3**

2 - Safety and environment **7**
2.1 - Warning symbols used in this manual. 7
2.2 - Lancer safety stickers 8
2.3 - Safety items on the implement 10
2.4 - Recommended Personal Protective Equipment (PPE) 11
2.5 - General safety and implement preservation 11
2.6 - Operating safety 13
2.7 - Implement transport and movement 18
2.8 - Safety during maintenance 22
2.9 - Definition of responsibilities 24
2.10 - Emergency procedures 26

3 - Know your Lancer **27**
3.1 - Project intended application of the Lancer 27
3.2 - Left side / right side convention 27
3.3 - Lancer identification (serial number) 28
3.4 - Available versions 28
3.5 - Identification of components 29
3.6 - Technical specifications 32
3.7 - Dimensions 32
3.8 - Optional and variable accessories 33
3.9 - Loose items supplied with the Lancer 35
3.10 - Estimated service life and decommissioning 36

4 - Lancer assembly **37**
4.1 - Front axle assembly 37
4.2 - Header assembly 38
4.3 - Rear axle assembly 38
4.4 - Hub and wheel assembly 39
4.5 - Wheelset assembly 39
4.6 - Assemble the front driveshafts and supports 40
4.7 - Driveshafts and supports installation 40
4.8 - Distribution disc assembly 41
4.9 - Distribution discs protection bow assembly 42

5 - Engaging the Lancer to the tractor and preparation 43
5.1 - Engaging the Lancer to the drawbar 43
5.2 - Driveshaft assembly, adjustments, and working angle 45

6 - Lancer adjustments in operation 47
6.1 - Operation initial instructions 47
6.2 - Tractor speed 47
6.3 - Funnel change 48
6.4 - Conveyor belt deflector gutters height 49
6.5 - Conveyor belt speed 50
6.6 - Opening of the dosing gate 51
6.7 - Product application dosing test 51
6.8 - Distribution discs blades angle 54
6.9 - Distribution discs rotation 55
6.10 - Controlling the distribution width 56
6.11 - Distribution profile uniformity control 57

7 - Maintenance instructions 61
7.1 - Periodical maintenance plan 61
7.2 - Grease lubrication (daily) 63
7.3 - Gearbox lubrication 65
7.4 - Transmission chains maintenance 66
7.5 - Conveyor belt adjustment and maintenance 68
7.6 - Tire inflation 70
7.7 - Wheel hub maintenance 70
7.8 - Front wheels toe-in adjustment 72
7.9 - Removal and installation of the wheels 73
7.10 - Lancer cleaning and preservation 74
7.11 - Suggested spare parts for stock 76

8 - Diagnosis of abnormalities and possible solutions 77

9 - Technical assistance 79
9.1 - Spare parts 79
9.2 - Jan Warranty Term 80

Although we know that safety is, above all, a matter of awareness and common sense, this manual presents a series of precautions to be taken when using the Lancer Organico.

Remember: All equipment has operating capacities and limitations. For your safety, do not exceed these limits.

Please note that it is not possible to list here all risk situations involved in the assembly, operation and maintenance of the equipment and, as previously stated common sense must be used.

NOTE:

Apart from the safety recommendations contained in this manual, review the recommendations contained in your tractor's Manual.

2.1 - Warning symbols used in this manual.

NOTE:

This symbol with the word "NOTE" indicates special interest points to maintenance or operation instructions. Failure to follow these recommendations may result in reduced performance, decreased service life or minor damage to the equipment and indirect risks to your safety, as well as voiding the factory warranty.

IMPORTANT:

The symbol shown next to it and the word "IMPORTANT" are used to highlight special instructions and/or procedures that, if not followed, may result in premature equipment wear and risk of minor to moderate personal injury, in addition to voiding the factory warranty.

ATTENTION!

The symbol beside it and the word "ATTENTION" identify instructions that, if not observed, represent a risk of accidents with serious bodily injury and even death, as well as severe damage, total loss of the equipment and loss of the factory warranty.

2.2 - Lancer safety stickers

The Lancer has stickers containing the main safety precautions related to the use of the equipment.

Always keep the stickers in good condition. In case of damage or repainting of the Lancer, you can purchase new stickers as a replacement part: just ask for the code in the lower right corner of the stickers.



Code: 74094005 - Request the instruction manual.



Code: 74094004 - Bolt retightening.



Code: 74074074 - Oil change.

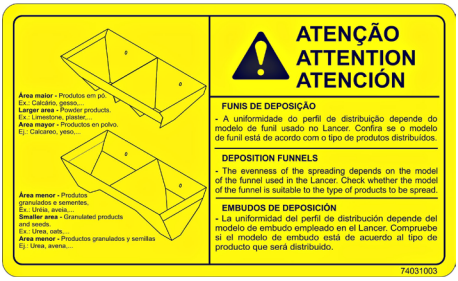

Code: 74031003 - Deposition funnels.



Code: 74031121 - Stay away from the distribution area.



Code: 74031122 - Do not approach the driveshaft with the machine in operation.



Code: 74031120 - Conveyor belt tensioning.

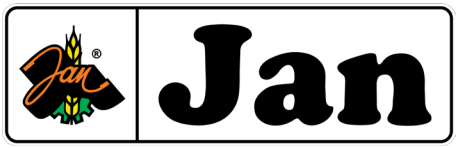

Code: 200000003471 - Sticker Logo Jan.



Code: 200000003184 - Blade angular position.



Code: 74011012 - Grease daily.

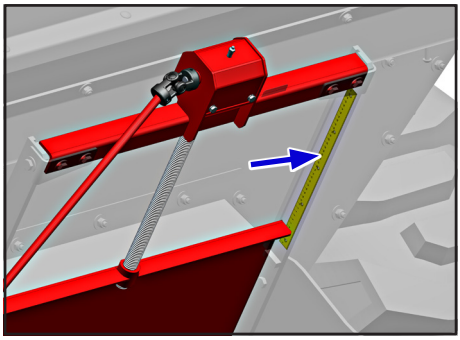

Dosing gate scale.

2.3 - Safety items on the implement

The implement has several safety items, such as guards and decals (see item 2.2). The correct use of these items is essential for operating the Lancer.

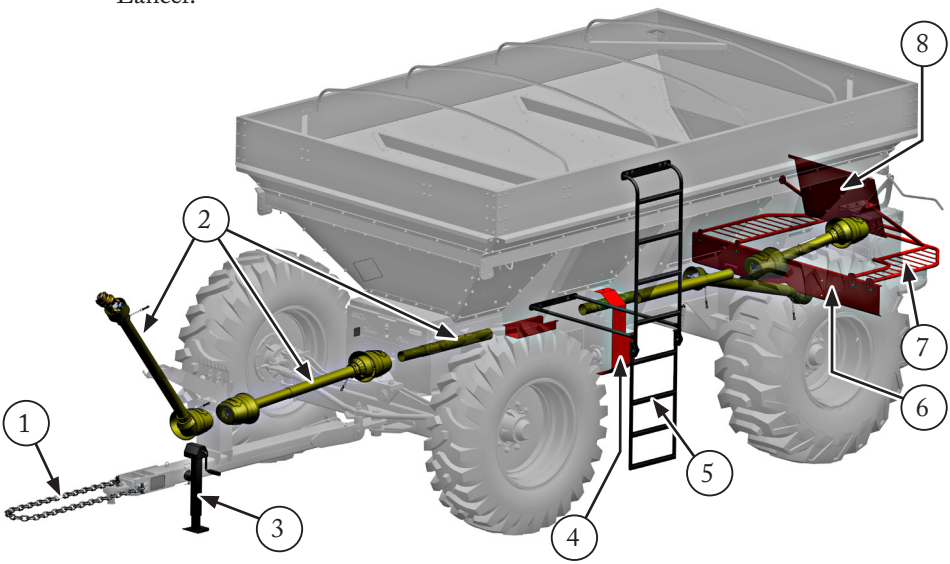

1. Safety chain: prevents complete separation between the tractor and implement in the event of accidental disengage of the drawbar pin.
2. Protection of all driveshaft segments.
3. Header support foot (jack): facilitates the procedure for engaging the Lancer to the tractor.
4. Transmission protections.
5. Access ladder to the tank.
6. Protection: prevents the released product from reaching parts of the Lancer structure.
7. Protective hoop: prevents access to the distribution discs.
8. Dosing system protective cover.

ATTENTION!

Take the necessary precautions to prevent the cover (8) from falling due to external forces, such as wind. Risk of serious injury.

2.4 - Recommended Personal Protective Equipment (PPE)

All personnel involved in operation and/or maintenance must use the PPEs recommended in figure alongside:

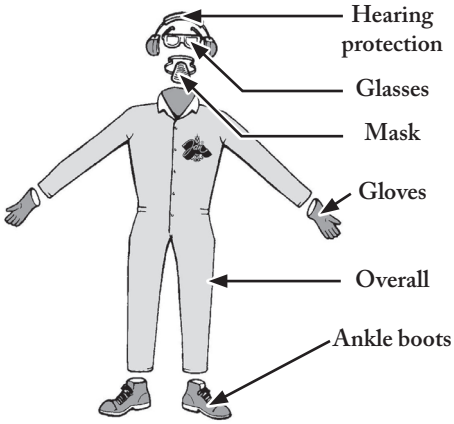

NOTE:

Additional personal protective equipment may be required or necessary depending on the specific application of the equipment.

2.5 - General safety and implement preservation

Jan values the safety of those who use its products.
This manual provides essential instructions that must be read and carefully understood. It is the responsibility of the equipment owner to be familiar with the operating procedures and the risks associated with its use.



Read this manual carefully!

Failure to read this manual may result in serious accidents.



This implement has moving parts!

Approaching or interfering with them may cause serious injuries and even limb amputation or death!



People and animals must maintain a minimum distance of 60 meters from the distribution discs when the Lancer is in operation.

- In addition to the safety guidelines presented in this document, also follow the instructions in your tractor manual.
- Make sure the tractor has adequate capacity to operate the Lancer; refer to the requirements in Technical Specifications, item 3.6.
- Never use the equipment if you notice any sign of structural or transmission failure.

- In case of any doubt or suspicion, immediately stop the operation and inform the responsible person or contact Jan After-Sales Service: see chapter 9.
- Personnel in training may only operate or assist in the use of the implement when properly supervised and instructed by qualified and experienced professionals.
- This manual must remain accessible and be known by all personnel involved in the operation.
- Use the PPEs indicated in item 2.4.
- Avoid loose clothing and keep long hair tied back.
- Remove accessories such as watches, earrings, rings, chains, and similar items when working with the implement.
- Do not operate the implement if you are tired, under stress, or under the influence of alcohol, drugs, or certain medications.
- Do not smoke while operating or remaining near the implement.
- Turn off the tractor engine before performing any adjustment, maintenance, or other intervention on the Lancer.
- Make sure you are fully familiar with the equipment's operating and maintenance procedures. Before first use, present this manual and instruct the operators.
- Never allow unauthorized persons to operate the Lancer or the tractor.
- Keep children and bystanders away during operation, maneuvering, or engaging of the implement.
- Do not allow people to remain on, around, or inside the Lancer. This is only permitted with the equipment stopped, the engine turned off, and all measures taken to prevent falls and accidents.
- Always keep the implement in good working condition.
- Before starting movement, ensure there are no people, animals, objects, or obstacles in the path.
- Follow all instructions contained on the safety decals affixed to the implement.
- Carry out proper cleaning of the implement.

2.6 - Operating safety

IMPORTANT:

Prevent obstacles and the risk of accidents: always disengage the Lancer on flat, level ground and chocking the wheels with suitable wedges to ensure complete immobilization of the wheels.

A) General precautions

- Only load and unload the Lancer with the implement engaged to the tractor.
- Operate the implement only with all protective components properly installed.
- Do not transport people during operation or travel.
- When making sharp turns, disengage the power take-off (PTO) and make sure the tractor's rear tires do not interfere with the Lancer header.
- When operating the implement, keep the jack (1) off the ground.
- Only allow people involved in the operation to approach the equipment.
- Ensure that the wheel fastening nuts are always properly tightened.
- When working, especially on sloped terrain, exercise extra caution to maintain stability and control of the tractor and implement, using appropriate speeds for each situation.

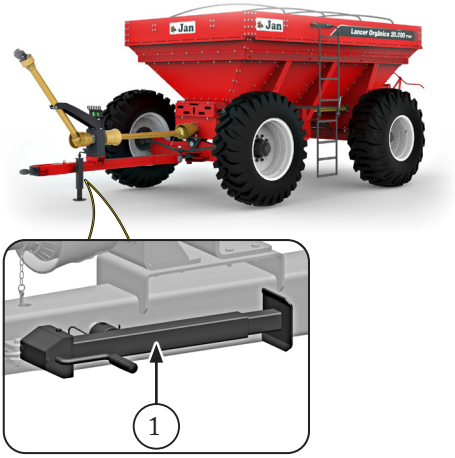

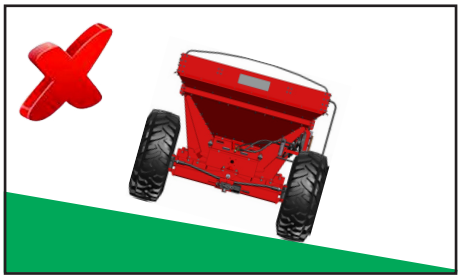

B) Precautions when engaging and disengaging the Lancer

- Make sure that the tractor drawbar is sized for the size and weight of the loaded Lancer: a drawbar that is too thin and long may not withstand the forces between the implement and the tractor.
- Use a suitable engaging pin (1) and always install a locking device (2).
- Perform maneuvers with the tractor at low speed and do not allow people to approach the implement or remain between the tractor and the equipment.
- Always disengage the Lancer on flat, level ground. Besides facilitating the procedure, it also makes the engagement safer and easier.
- Before disengage, make sure the Lancer will remain stationary. When in doubt, use appropriate wedges to chock the wheels.
- Use the jack (3) correctly, always installing the locking pin (4) and a safety cotter pin in the jack in both positions: parking and transport.
- When attaching the Lancer to the tractor, always connect the safety chain (5) to a structural point, such as the drawbar support (6).
- Do not move the tractor with the jack lowered (parking position).

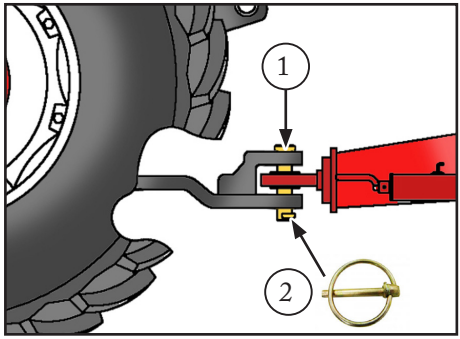

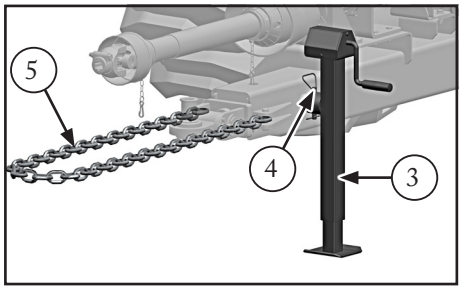

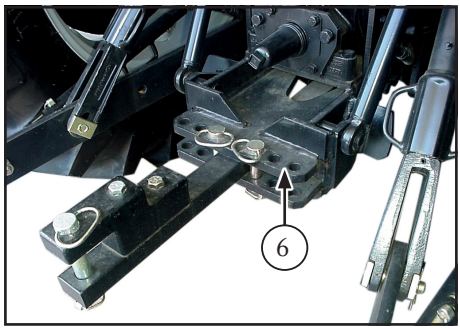

C) Tank and ladder

To open and close the ladder:

a) To close the ladder (1), fold the bottom section (1a) upwards.

b) To open the ladder, swing the bottom (1a) downwards.

- The lower part (1a) is held in both positions by the spring (2).
- Always hold on with both hands on the ladder (1).
- Always climb up and down the ladder facing it.

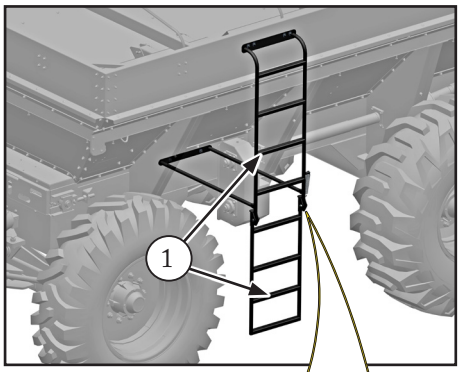

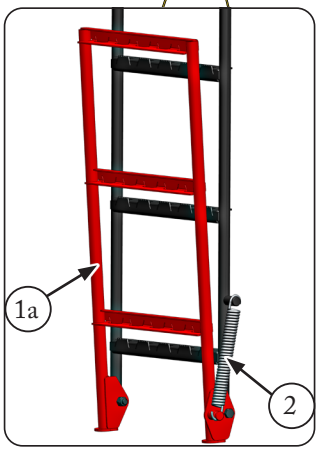

IMPORTANT:

The interior of the tank is smooth and may cause slipping and injuries. Always support yourself securely.

- Always disengage the tractor PTO before entering the tank.

D) Power Take-off (PTO) and rotating components

- When making sharp turns, turn off the power take-off and make sure the rear tires of the tractor do not interfere with the header of the Lancer.
- Never approach the driveshaft nor moving components.
- Do not wear loose hair and/or loose clothing when operating equipment.
- Only connect the driveshaft to the PTO axle with the engine shut off.
- When engaging the driveshaft for the first time, check whether its length is adequate: see item 5.2.
- Don't start or shut off the engine with the power take-off (PTO) engaged.

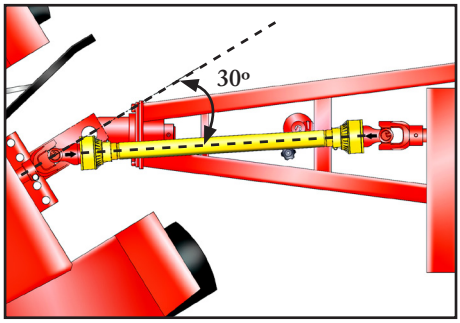

- Never exceed a 30° angle of the driveshaft during operation.

E) Lancer-to-tractor relationship:



- Read the tractor manual safety rules and observe all precautions related to the tractor.
- Especially when working on slopes, take all necessary precautions to maintain tractor stability and directional control, such as:

- Only tow the loaded Lancer with a properly sized tractor. A very light tractor or one with insufficient power can lose control.
- Use correct ballast for the tractor's front and rear axles.
- Always lock the brake pedals together using the connecting lock (1).
- Maintain a speed suitable for the conditions of each situation. When traveling downhill, always use the same gear that would be used when traveling uphill.
- Do not drive the tractor sidewards in relation to the slopes, but in a perpendicular direction, that is, move the tractor up or down but not sidewards.

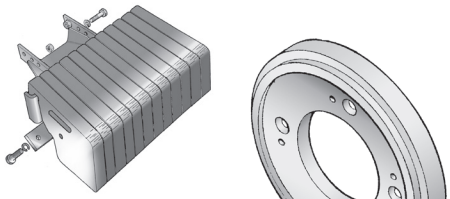

Ballast weights for the tractor

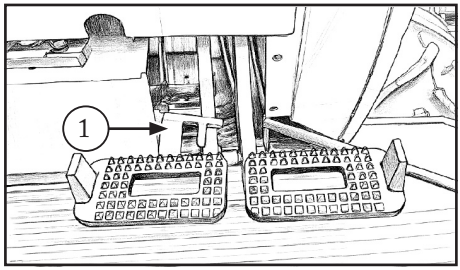

Image for reference only

F) Safety around power lines

- When traveling or operating near power lines, always observe the clearance between the equipment and the power line cables. Also check the lateral distance from poles, towers, and guy wires.
- High-voltage lines require additional clearance to ensure safe operation.
- If there is any doubt regarding safe distances, consult the local power utility or the appropriate authorities.

- Before passing under electrical cables, check for any raised or extended components on the equipment.
- Retract or lower any raised parts before continuing movement.
- Never park the equipment under or near power lines.
- When encountering a downed cable, do not approach and prevent others from doing so.
- Immediately notify the power utility company responsible for the electrical network.

Guidelines

In case of contact with energized cables, strictly follow the instructions below:



- Stop the equipment immediately and shut off the engine.
- Assess whether it is possible to leave the equipment without touching the wires.
- If it is not safe, remain on the equipment and request assistance.
- Do not touch the downed cable or any metal component in contact with the power line.
- Do not allow people to approach.
- Only power company technicians or firefighters are authorized to perform rescue or equipment release procedures.
- If you have a phone, contact third parties, the power utility, and/or the fire department.
- If you do not have a phone, remain at the operator's station until help arrives.

In the event of a tractor fire or any situation that makes it impossible to remain at the operator's station, strictly follow the precautions below:

ATTENTION!

Never touch the ground and the equipment at the same time. This simultaneous contact causes an electric shock through the body that is usually fatal!

The only safe way to leave the equipment is by jumping away:

- ***Jump away with both feet together, to the side opposite the point where the equipment is in contact with the power line.***
- ***After jumping, move away without separating your feet (moving in "bunny hops") until reaching a safe distance.***
- ***Only allow electric utility company crews and/or the Fire Department to approach.***

2.7 - Implement transport and movement

A) Travel on public roads

ATTENTION!

The movement of the implement engaged to the tractor must not be carried out on public roads and highways. This practice must be restricted to within properties and rural areas.

- Consult the traffic authority regarding the regulations in force in your region and the possible permission to travel with the Lancer and tractor on certain stretches of roads.
- Request guidance, authorization, and procedures in writing.
- In locations and situations where movement is authorized, follow precautions such as:

- Only duly qualified operators may drive the tractor, meeting the requirements of the license category.
- On level roads, do not exceed the speed of:

  20 km/h, with the tank loaded.

  30 km/h, with the tank empty.

- On uneven roads, reduce speed enough to ensure safety.
- Be informed about the mandatory safety devices, such as the SMV sticker (1), lights and lamps, turn signals (flashers), among others.
- The SMV sticker is installed at the rear of the Lancer. The tractor must also have its own SMV emblem.
- Keep the brake pedals (2) coupled by the locking latch (3), ensuring uniform braking on both wheels. Before accessing the road, check that the brakes, headlights, lamps, and turn signals are working properly.
- Always drive the tractor on the appropriate side of the road.
- Turn on the hazard warning lights.
- Keep the headlights on, even during the day.

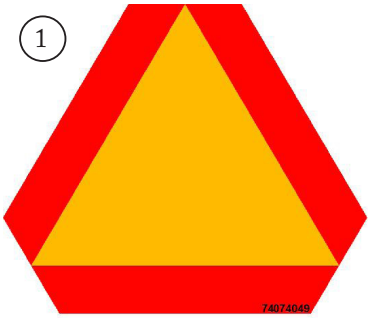

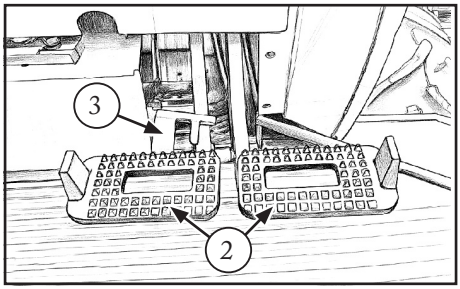

Image for reference only

B) Transport by truck

- For transporting the Lancer over long distances or on public roads, transportation by truck is recommended, as this is the safest method. Even so, this procedure must comply with the requirements established by current traffic legislation.
- The tank must be empty.
- To transport the Lancer Organico on a flat bottom truck, the wheels must be removed.
- Remove the header and starting driveshafts: See items 4.2 and 4.6.
- When using a flatbed truck, there is no need to remove the wheels.

- Transport must be carried out exclusively by professionals qualified for this type of operation and using a truck properly sized for the load.

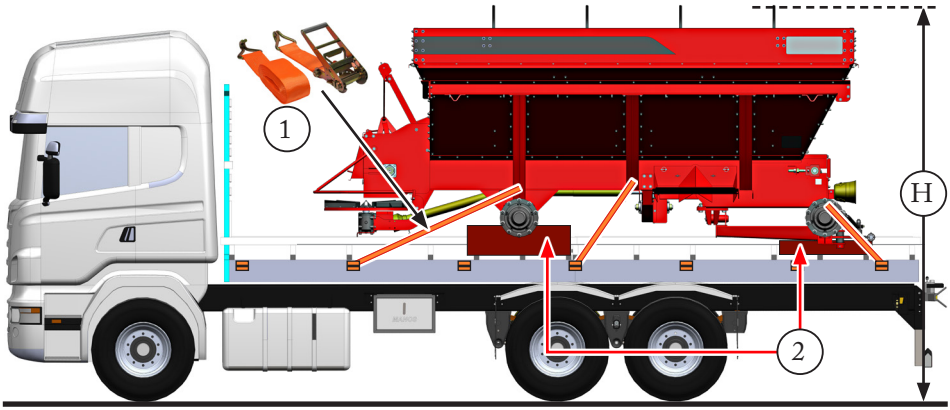

- The implement must be loaded onto the truck by lifting it using the lifting lugs (3) located at the four corners inside the tank.

IMPORTANT:

Do not use forklifts or cranes to move the Lancer.

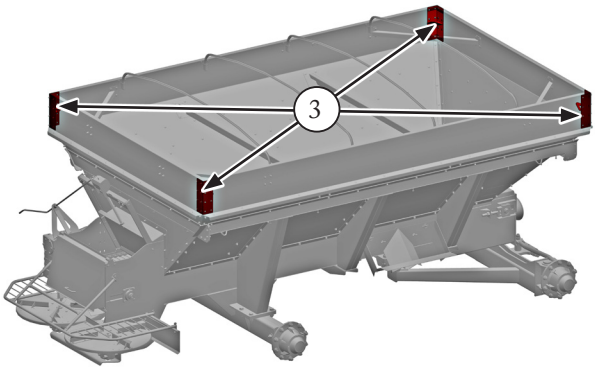

- Use wooden chocks (2) at the ends of both axles.
- Check the permitted height limit (H), measured at the highest point of the Lancer.
- When passing under overpasses, observe the indicated clearance height.



1

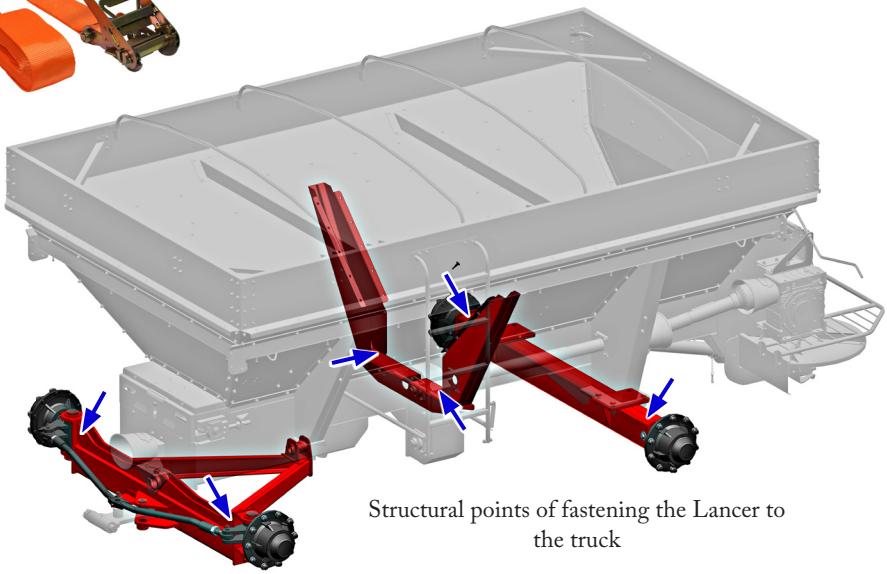

Structural points of fastening the Lancer to the truck

- The implement must be positioned and secured on the truck bed or trailer without any lateral overhang.
- Make sure that no component or section of the implement remains loose on the truck bed.
- Exercise extra caution when passing near trees, power lines, etc.

IMPORTANT:

The implement must only be fastened to structural points and never to moving components and/or other components with no structural function, otherwise serious damage may occur.

- The implement must be secured with straps (1) or wire ropes (on both sides of the equipment), anchored to structural points, as shown in the figures:
- Each strap or wire rope (1) must have a load capacity of at least twice the total weight of the Lancer and must be equipped with a ratchet to ensure complete stability during transport.

2.8 - Safety during maintenance

- If the tractor is attached to the Lancer, always turn off the engine before performing any maintenance or adjustment. Couple a low gear, apply the parking brake, and remove the ignition key.
- Position the equipment on a flat, level, and firm surface, ensuring proper support to carry out the work.
- Clean both the operating area and the implement beforehand.
- The presence of oils, grease, or other residues may cause slips and falls.
- Take precautions when handling oils and grease, as these products contain carcinogenic chemical components. If contact with eyes or ingestion occurs, seek medical attention immediately.
- When removing one or more wheels, never leave the implement supported only by the jack; use sturdy and stable stands under the structure or axle.
- Never remain under loads suspended by a jack or lifting equipment.
- Place removed components or assemblies on appropriate workbenches or jack stands that are properly sized, stable, and supported on solid surfaces.
- Fully open the cover (1) and chock it to prevent external forces (such as wind) from causing the cover to fall. Risk of serious injury.





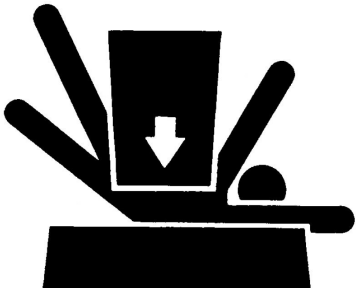

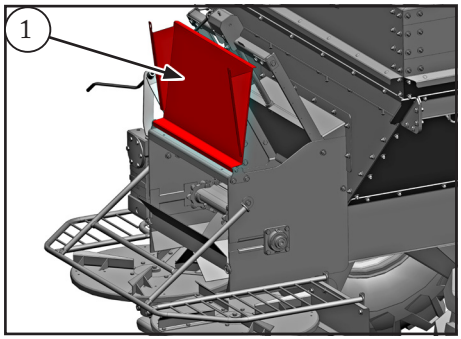

Take proper fire prevention precautions, such as:

- Keep a fire extinguisher always available in the work area.
- Keep the implement and the environment clean, free of oil, grease, straw, or any other flammable material.
- Do not smoke while performing the activities.
- If lighting is insufficient, never use an open flame to illuminate the area, as there is a high risk of fire.
- If access to high sections of the implement is required, use suitable ladders or scaffolding, with appropriate load capacity, properly leveled and firmly supported.
- In case of an accident, seek medical assistance immediately.
- Before applying grease to the grease fittings or removing drain, level, or oil fill plugs, clean the area beforehand to prevent dirt from entering.
- Do not start the tractor in an enclosed environment without ensuring proper ventilation through open doors and windows, as exhaust gases may cause intoxication, fainting, and even death.







2.9 - Definition of responsibilities

According to NR-31 - Regulatory Standard for Occupational Safety and Health in Agriculture, Livestock, Forestry, Forest Harvesting and Aquaculture, in addition to the powers and obligations assigned to the Labor Inspection Secretariat (SIT), both the operator and the owner have responsibilities regarding safety in the use of machines.

Some of the provisions of NR-31 are presented below:

A) Responsibilities of Jan Implementos Agrícolas S/A

- Ensure that our customers are fully satisfied with the products and services we offer.
- Provide all necessary information so that the customer can maximize the performance and durability of the Jan product.
- Provide the first owner with all essential guidance for the proper operation of the equipment, either digitally or in person. In this presentation, various information is provided, including demonstrations of procedures involving all parts of the implement, as well as details on operation, maintenance, warranty conditions, and other relevant aspects.

ATTENTION!

Jan Company is not responsible for consequences arising from:

- ***Modifications to the original characteristics of the implement, as well as the installation of accessories not approved by Jan.***
- ***Damage to the implement or risks to the operator's physical integrity resulting from lack of knowledge, failure to follow safety instructions, lack of skill, or negligence.***
- ***Operation or movement in areas with excessive slope, whether lateral or longitudinal, or on terrain that does not provide adequate traction or support.***

B) Responsibilities of the owner and/or operator

- The owner, whether the operator or not, is responsible for instructing and training themselves and any person directly or indirectly involved in the use and maintenance of the implement.
- Comply with and enforce all recommendations provided in the instruction manuals.
- Keep this manual in an easily accessible location for anyone who needs to consult it.
- Maintain the implement and the instruction manuals in good condition.
- Ensure adequate working conditions, hygiene, and comfort, as well as identify and assess risks to workers' safety and health.
- Provide the necessary Personal Protective Equipments (PPEs) and require its use.
- Seek information on hygiene, safety, and occupational health practices.
- Encourage and implement continuous improvements in the work environment and working conditions.
- Instruct all individuals involved in the use of the implement regarding environmental care, risks, and requirements established by current labor and environmental legislation.
- Adopt and comply with standards related to safe work practices.

C) Recommended requirements for the operator

- Skills: driving and operating agricultural equipment.
- Capabilities: operation and maintenance.
- Recommended training: training for operation and maintenance of agricultural machinery.
- To operate agricultural equipment on public roads, consult the traffic legislation in force in your region regarding authorization for this practice and, if permitted, verify all prerequisites and conditions, such as license category, specific permits, among others.

D) Environmental responsibilities

- Any implement component, as well as fluids and other materials, must be properly disposed of when replaced, in accordance with the applicable legislation in your region and the respective manufacturers' guidelines.
- Preserve the environment by avoiding contamination of soil, air, and water.
- To do so, properly dispose of contaminated parts and other items replaced due to wear or damage.
- If recycling cannot be carried out immediately, waste must be stored in appropriate locations until collection.

When replacing parts and oils

- Store oil in closed containers, in a dry, ventilated area and out of reach of children or animals.
- As soon as possible, deliver the material to fuel stations or companies specialized in collection and recycling.
- Store the removed parts, such as chains and hoses, in boxes and send them to appropriate collection points.

2.10 - Emergency procedures

Situations considered as emergencies include:

- Fire.
- Implement rollover.
- Contact with power lines: for this circumstance, proceed as indicated in item 2.6 F.

Whenever any situation occurs that puts at risk the safety of those involved in the operation, the equipment or the possibility of damage occurring:

- Completely stop the operation, also shutting off the PTO (Power Take-Off) and the tractor.
- Remain calm and move away from the area, if possible.
- In the event of injury, provide first aid.
- Before calling emergency services, avoid crowding and gather information about the victim and the incident.
- Call emergency services, such as firefighters or hospitals.
- The person involved must receive medical evaluation, even if they appear to be physically well.

After the emergency condition and before returning operation, eliminate the cause of the problem and validate the safe condition of the implement as quickly as possible.

3.1 - Project intended application of the Lancer

The Lancer Organico distributor is designed for distribution of manure from cattle, pigs, chickens (including poultry litter), as well as powder products such as limestone, plaster and others.
It contains two distribution discs fed by a steel slatted conveyor belt.
The product is driven to the rear of the machine, passes through the flow regulating gate (2) and then is deposited on the discs (4) by the funnel (3).

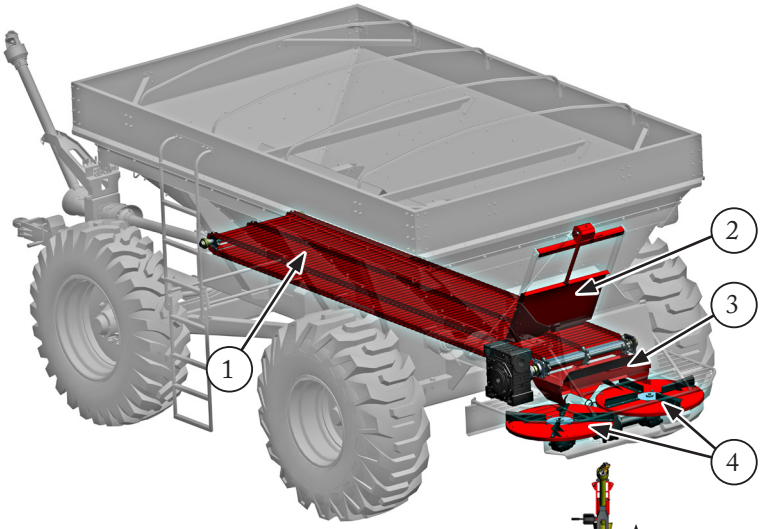

3.2 - Left side / right side convention

The definition of the left side and right side is based on the viewpoint of a person looking at the implement from the rear and/or seated in the tractor operator's seat.

This convention is followed throughout the manual when describing procedures and locating Lancer components.

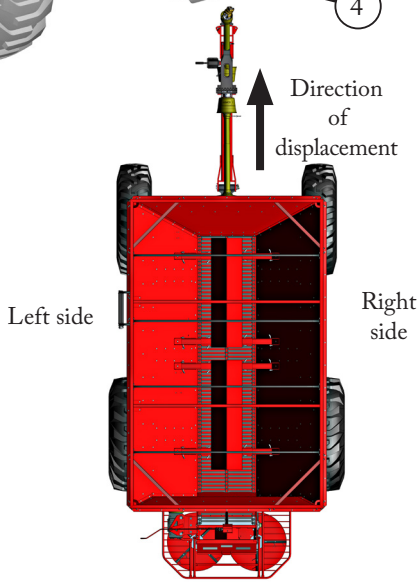

3.3 - Lancer identification (serial number)

The Lancer Organico is identified by a serial number, which allows accurate records to be maintained of any modifications made to the components and design characteristics of the equipment.

The serial number (1) is stamped on a plate attached to the right side.

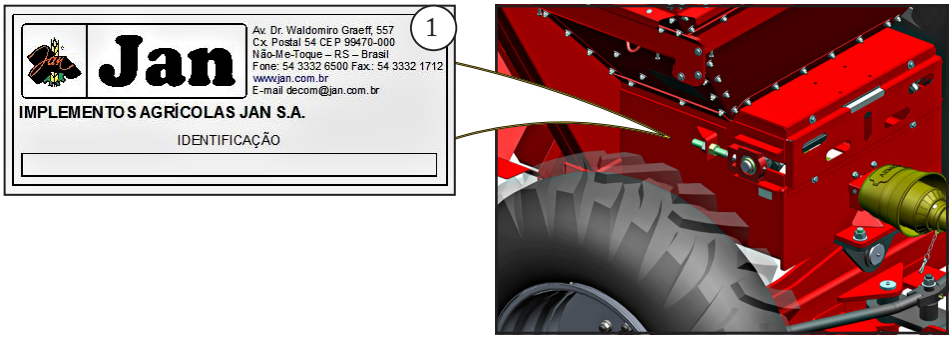

3.4 - Available versions

Lancer Organico 20,000 TM (Mechanical Transmission) made of carbon steel, dismantlable.



3.5 - Identification of components

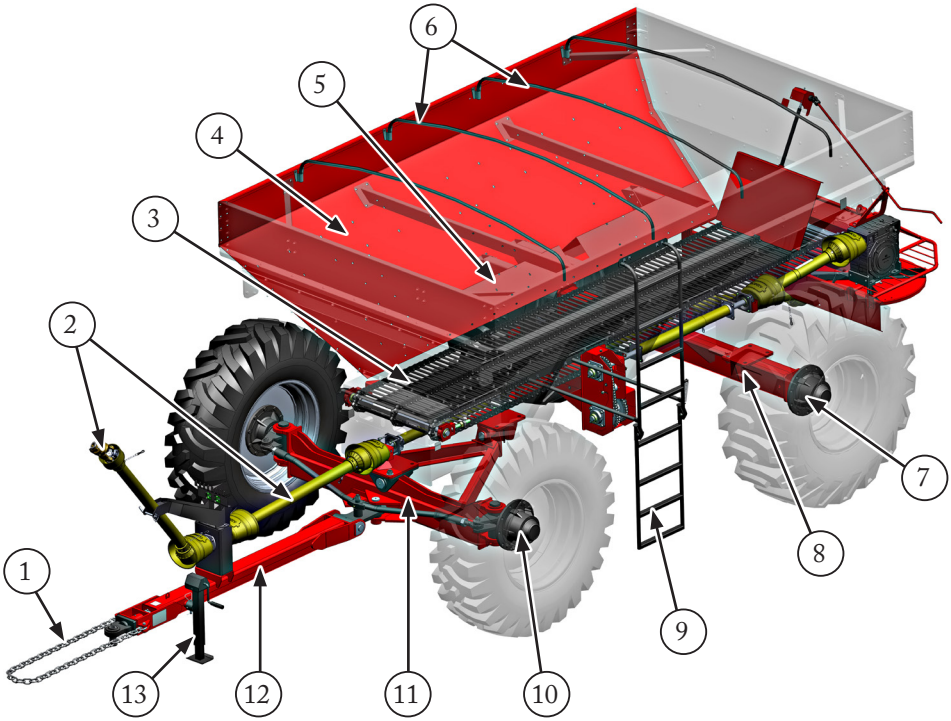

1. Safety chain.
2. Driveshafts for the conveyor belt and distribution discs: all driveshafts have safety covers against accidental winding.
3. Slatted conveyor belt: made of steel, it provides a long service life. It is made up of links, which facilitates maintenance.
4. Tank: carbon steel dismantlable. Refer to item 3.6 for technical specifications.
5. Conveyor deflector gutters: prevent excessive product pressure on the conveyor during distribution, ensuring more uniform distribution and extending the service life of the conveyor and the drive system.

   NOTE: Remove the gutters when distributing organic fertilizer.
6. Tarp support bows: 4 units.
7. Rear wheel hubs.
8. Rear axle.
9. Tank access ladder (4).
10. Front wheel hubs.
11. Front axle.
12. Header.
13. Support foot (mechanical jack).

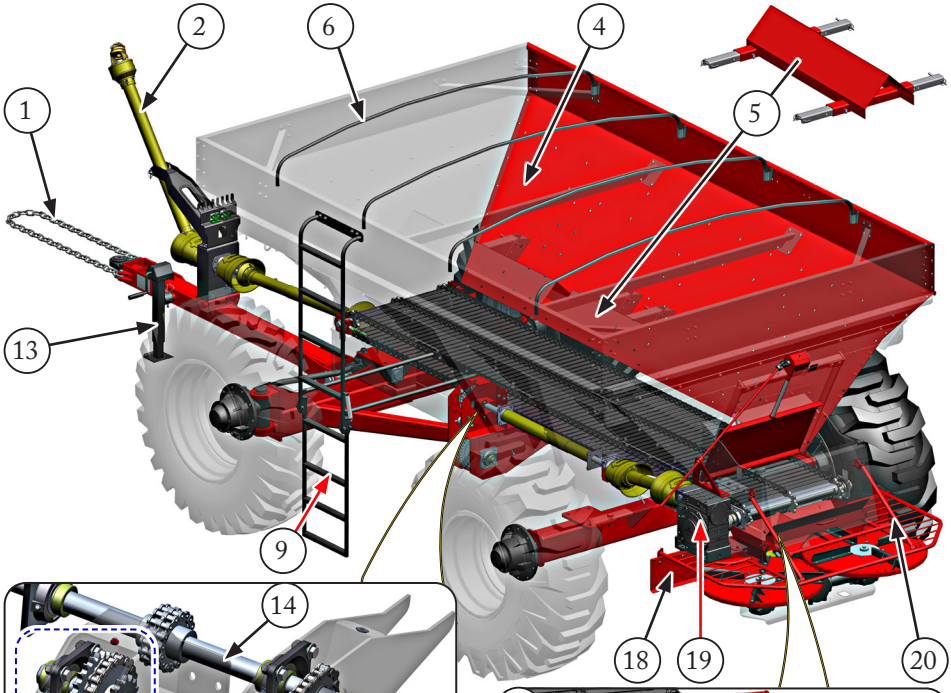

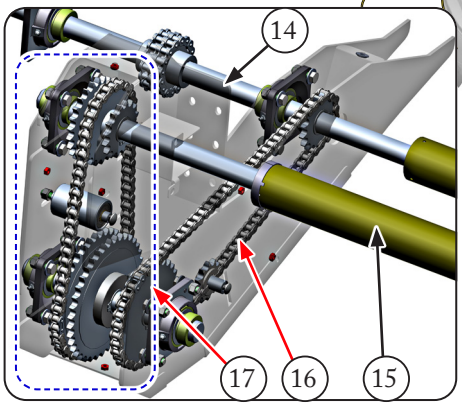

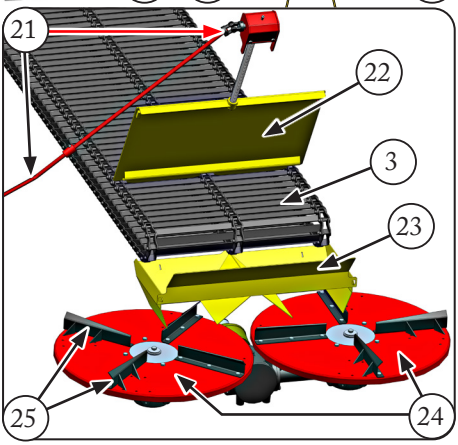

14. Drive (center) main axle.

15. Left side axle: Conveyor belt reducer (19) drive.

16. Transfer chain from axle (14) to axle (15).

17. Gear pairs to achieve three transmission ratios, and therefore conveyor belt speeds (3).

18. Protective sheet against material released by the discs against the Lancer.

19. Worm gear reducer for conveyor belt drive.

20. Discs (24) access protection hoop.

21. Dosing gate opening control (22) by means of a crank located on the left side of the Lancer.

22. Product dosing gate controlling product flow to the distribution discs (24).

23. Deposition funnel: directs the product from the conveyor belt (3) to the center of the distribution discs (24), contributing to the uniformity and reach of the distribution.

    There are two funnel versions supplied with Lancer Organico:

A. For organic fertilizer.

B. For powder products such as limestone and plaster.

24. Distribution discs.

25. Disc blades: There are four identical units on each disc, but not interchangeable between the discs. The blades allow angular adjustment.

26. Triple gearbox disc drive: Formed by an oil-lubricated sealed assembly.

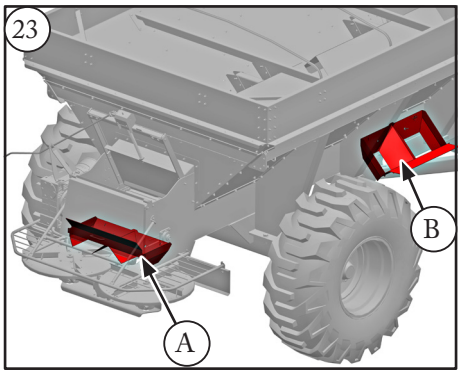

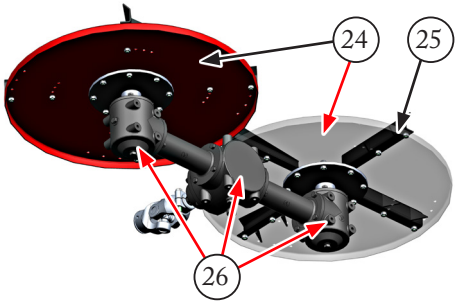

3.6 - Technical specifications

Item / system	Organico 20,000 TM
Volumetric capacity (L):	10,000
Maximum recommended load capacity (kg):	20,000
Required power (hp):	110
PTO rotation (rpm):	540
Disc rotation (rpm - maximum):	612
Conveyor belt drive roller rotation (rpm selectable in 3 gear ratios): the reducer has free turning system.	20.0 - 8.5 - 5.7
Engage system – drawbar type:	With header. The drawbar must be of the Heavy Duty type.
Distribution width (m):	10 to 16 m
Approximate empty weight with tires (kg):	3,600

3.7 - Dimensions

Item	Orgânico 20,000 TM
A. Overall length:	7,740
B. Overall height:	No tarpaulin bows: 2,547 With tarpaulin bows: 2,773
C. Disc height above ground:	797
D. Minimum free gap (under front axle):	484
E. Overall width (external measure of rear wheel):	3,231
F. Conveyor belt width:	785

NOTE:

**Dimensions valid when using wheel assemblies approved by Jan for the Lancer Organico. Refer to item 3.8 A.*

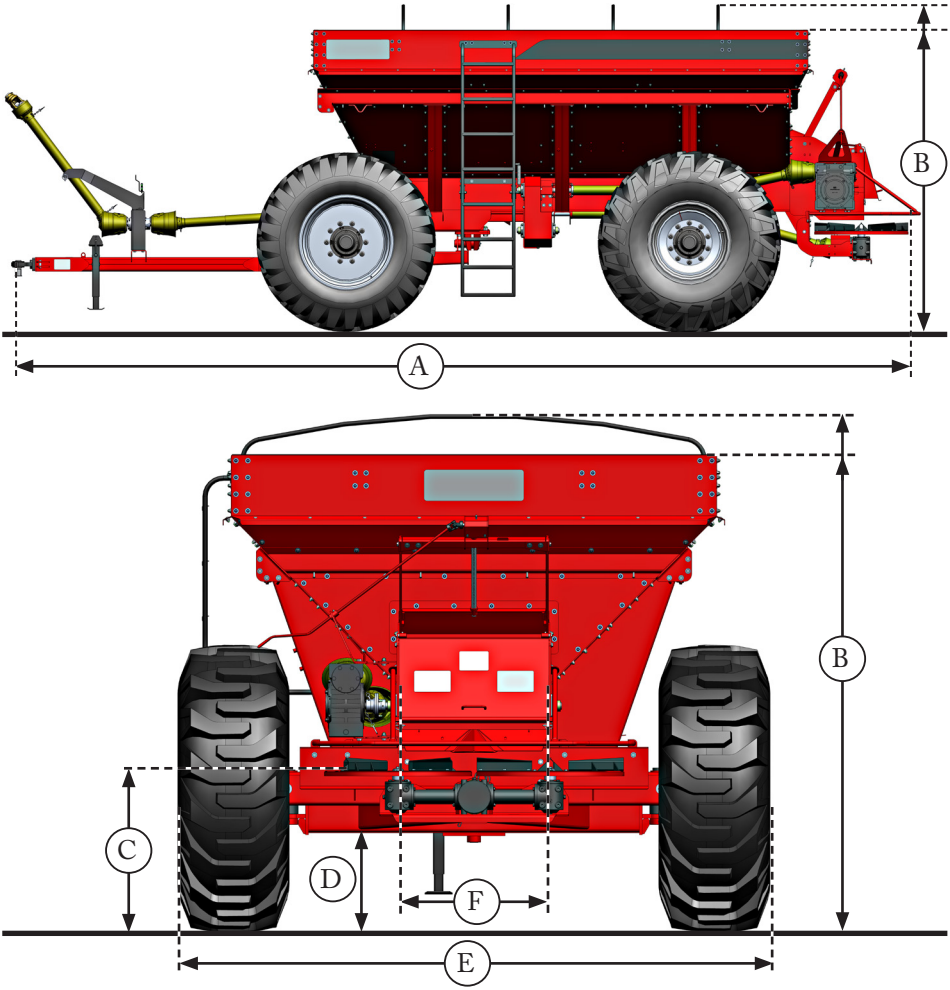

3.8 - Optional and variable accessories

A) Wheel and tire options and specifications

Front tires / rims:

18.4-30 TM 95 (12 ply) / DW 16-30 (code: 23704600).

Rear tires / rims:

23.1-26 MB 39 (14 ply) / DW 20-26 (code: 23704800).

Tires and wheels specifications

18.4-30 TM 95 (12 ply)			
Width (mm)	Diameter (mm)	Nominal capacity (kg)	Maximum pressure (psi)
481	Ø 1,536	4,134	32

Wheel / rim: DW 16-30		
Center hole diameter (mm)	Number of bolts / thread	Bolt circle diameter and hole diameter (mm)
Ø 221	8 and 10 / M22	Ø 275 / Ø 24

Tire 23.1-26 MB 39 (14 ply)			
Width (mm)	Diameter (mm)	Nominal capacity (kg)	Maximum pressure (psi)
608	Ø 1,570	3,950	28

Wheel / rim: DW 20-26		
Center hole diameter (mm)	Number of bolts / thread	Bolt circle diameter and hole diameter (mm)
Ø 221	8 / M22	Ø 275 / Ø 24

B) Miscellaneous accessories for the Lancer Organico 20,000 TM:

NOTE:

The items below are for reference only.
Each item has a specific part number.
Consult your Distributor or Jan's Sales Department.

- Tarp bows kit.
- 10 holes standard gauge 2,550 mm wheel kit.
- 10 holes sugar cane 2,800 mm wheel kit.
- 10 holes 650/65-30.5 wheel kit.
- Cotton gauge 3,040 mm wheel kit.
- Hexagon ISO variable rate electric kit.
- Hexagon variable rate electric kit.

3.9 - Loose items supplied with the Lancer

1. Instruction manual: On customer request.
2. Header.
3. Front driveshafts and brackets.
4. Wheels (tires and rims).
5. Wheel hubs.
6. Front axle.
7. Rear axle.
8. Distribution discs.
9. Protection hoop for distribution discs.



NOTE:

Refer to the next chapter on assembling items (2 to 9).

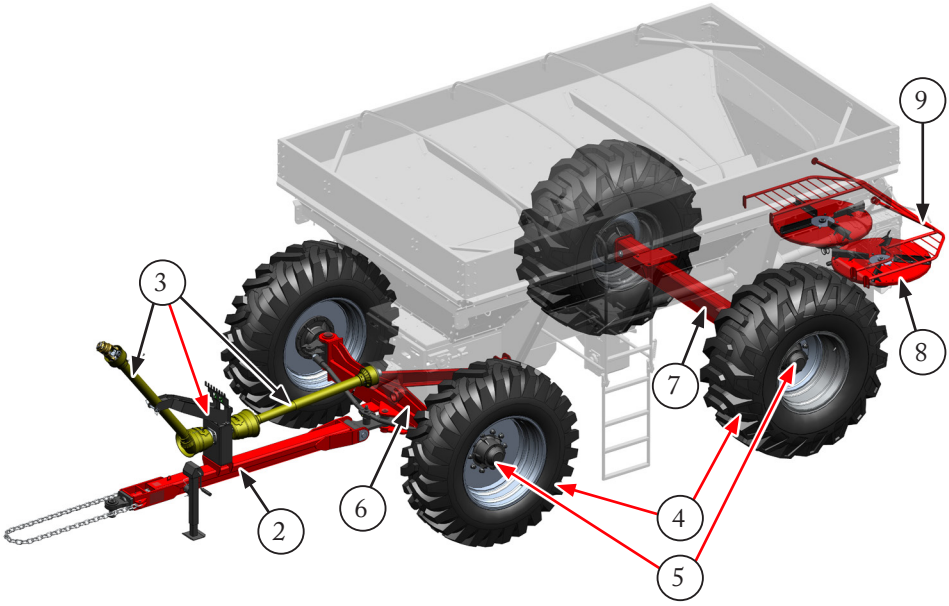

3.10 - Estimated service life and decommissioning

The service life of the implement cannot be precisely determined and is affected by several factors, such as:

- The care applied during use, maintenance, and preservation over the years.
- Operating conditions: number of hours worked per season and load intensity.
- Properties of the transported product.
- Working conditions.

Guidelines for disposal of the implement at the end of its service life (decommissioning)



- When the implement reaches the end of its service life and is taken out of operation, it is recommended to drain the oil.
- Most of the implement components are recyclable.
- Disassembly and recycling procedures must be carried out by qualified professionals, following instructions in accordance with the applicable legislation in your region or country.

ATTENTION!

- ***Perform assembly on a flat, firm, and level surface.***
- ***Use appropriate lifting devices capable of safely supporting the weight of the components.***
- ***To lift the Lancer assembly, use the 4 handles (1).***
- ***Never stand under suspended parts.***
- ***Do not improvise! Use suitable tools.***

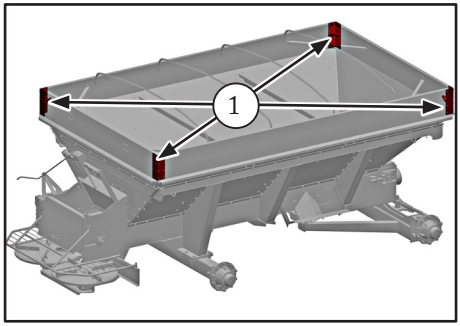

4.1 - Front axle assembly

a) Lift the chassis (1) at the required height using suitable hydraulic jack(s) or lifting means.

IMPORTANT:

Properly chock the Lancer chassis: Never work under a structure supported only by the jack.

b) Position the axle (2) and fasten it to the chassis (1) using 8 fastening assemblies (3): Hex bolts, flat washers, and a self-locking nut.

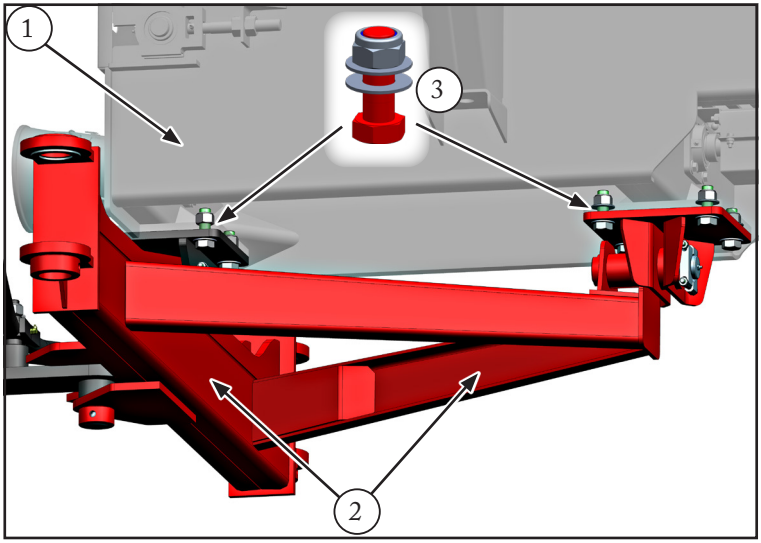

4.2 - Header assembly

a) Chock the Lancer to prevent movement during assembly.

b) Align the header (1) with the bushing (4) in front of the front axle.

c) Insert the pin (2) and assemble the castle nut (3).

Lock the nut with the corresponding cotter pin.

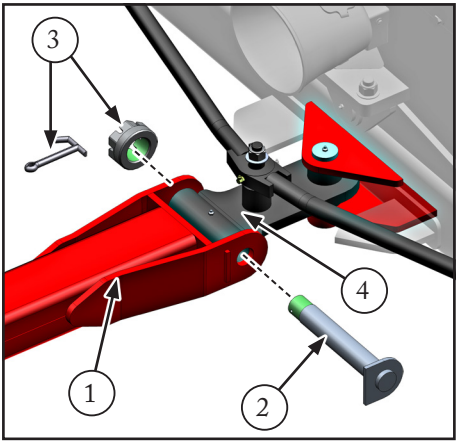

4.3 - Rear axle assembly

a) Hold the chassis (1) at the required height using hydraulic jack(s) or suitable lifting means.

IMPORTANT:

Properly chock the Lancer chassis: Never work under a structure supported only by the jack.

For added safety, engage the header to the tractor's drawbar.

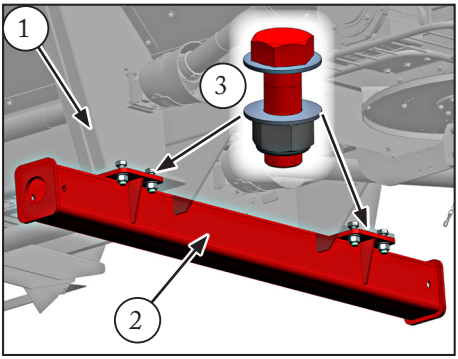

b) Position the axle (2) and fasten it to the chassis (1) using 8 fastening assemblies (3): hex bolts, flat washers, and a self-locking nut.

4.4 - Hub and wheel assembly

The front hubs (1) are already mounted on the axle: simply connect them to the steering rods (3):

a) Turn the hubs (1) to allow the special bolt and nut (2) to be assembled.

b) Connect the hub arm (1) to the bar (3) using the coupling items (2).

c) Fit the rear hubs (4) to the axle (5).

NOTE:

Either rear hub may be mounted on either side.

d) Fasten assembly with hex bolt + flat washers + lock nut (6).

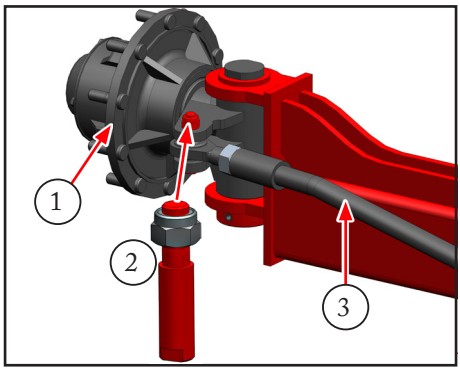

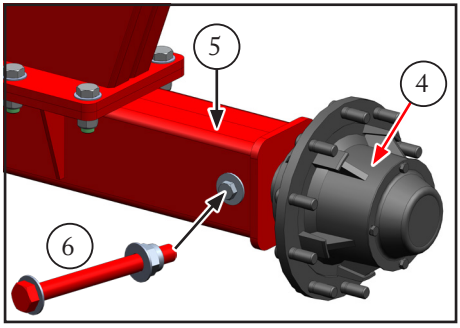

4.5 - Wheelset assembly

a) Lift up the Lancer assembly with suitable lifting means.

IMPORTANT:

Fasten the Lancer chassis with properly sized and stable stands. Keep the header engaged to the drawbar of the tractor.

b) Assemble the wheels, noting that the offset (X) is facing outwards.

NOTE:

Offset (X) is the largest extension of the wheel rims.

c) Install the nuts (1), of the wheels fastening.

d) Adjust the front wheel toe-in: see item 7.8.

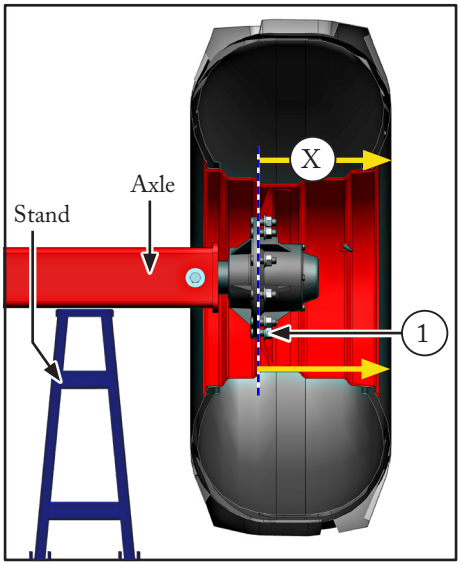

e) Lift frame assembly with wheels, remove axle stands (1) and lower assembly to ground.

f) If the Lancer is not engaged to the tractor, chock the wheels with wooden wedges to prevent unwanted movement.

g) Tighten the nuts (1).

4.6 - Assemble the front driveshafts and supports

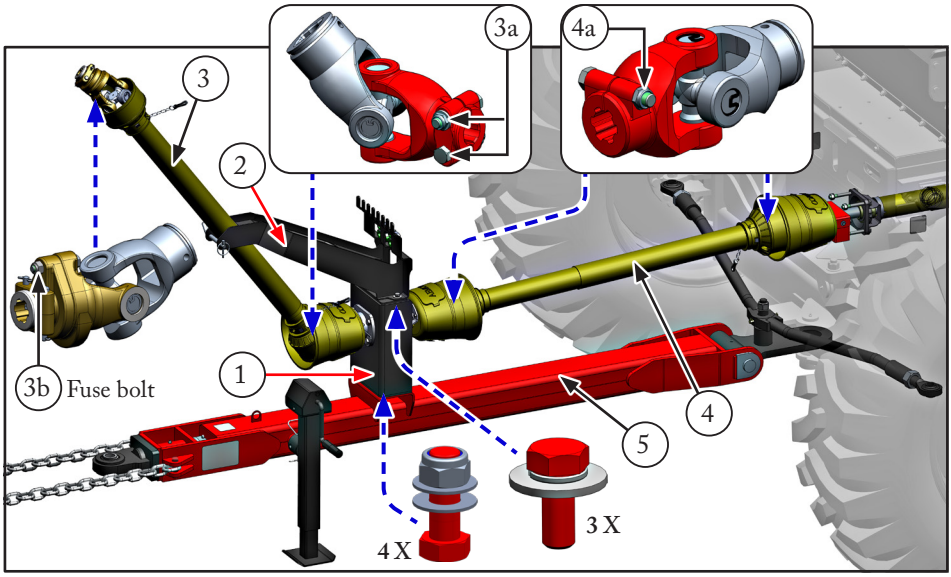

4.7 - Driveshafts and supports installation

a) Attach the lower support (1) and the upper (2) over the header (5) using the fastening items listed in the figure above:

b) Assemble the front driveshaft (3) to the support axle (1), fastening the fork with the two bolts (3a).

NOTE:

- *Adjust the length of the driveshaft (3): See item 5.2*
- *The front end of the driveshaft (3) has a shear bolt (3b): Acts in case of overload breakage.*

c) Mount the driveshaft (4) on its axles, securing the forks with the bolts (4a).

4.8 - Distribution disc assembly

a) The discs have correct mounting side:

- The left disk rotates clockwise.
- The right disk rotates counter-clockwise.
- The concave side of the right blade (Rb) and left (Lb) must face the direction of rotation.

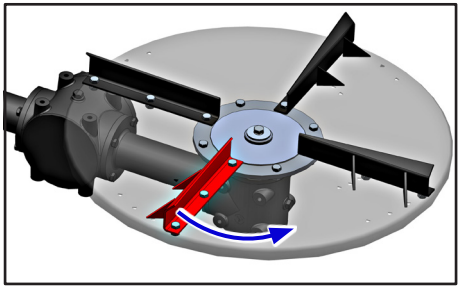

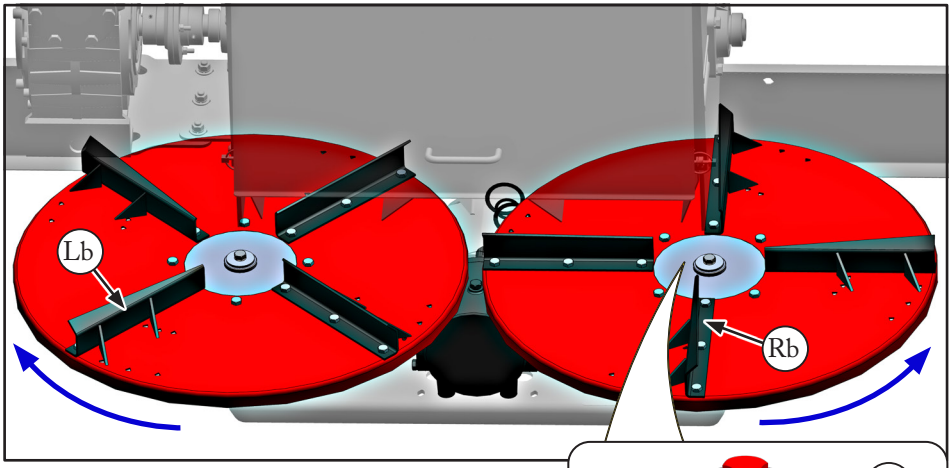

Assemble - for both discs:

a) Clean and lubricate axle and hub hole (2) of disc.

b) Assemble the retaining ring (3) on axle.

c) Fit key (4) to axle.

d) Fit the disc hub (2) on the axle of the respective drive housing.

e) Fasten both discs with the hex bolt + lock washer + flat washer (1).

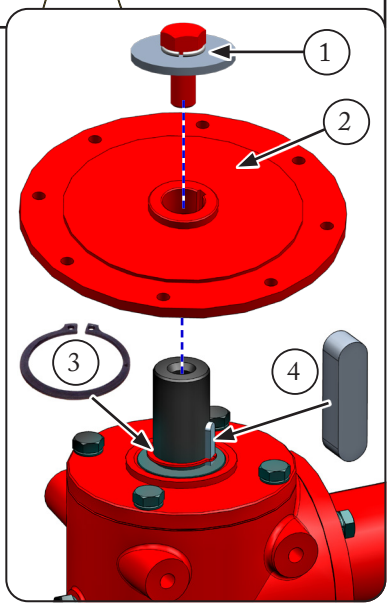

4.9 - Distribution discs protection bow assembly

Fasten the distribution disc guard (1) at the six points indicated with items (2), formed by: hex bolt, two flat washers, one lock washer and nut.

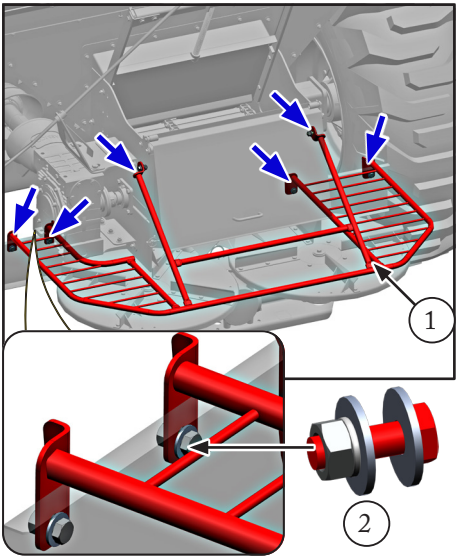

5.1 - Engaging the Lancer to the drawbar

A) Preliminary operations

After engaging the Lancer and before putting it into operation, it is recommended to check:

a) Whether the tank is clean, free of materials such as bags, rags, rocks, wood, etc.

b) Whether lubrication has been carried out at all recommended points: See items 7.2 and 7.3.

c) Whether all bolts and nuts are properly tightened and all components fastened properly.

d) Whether the oil level in the gearboxes is correct: See item 7.3.

e) Whether the tires are inflated to the recommended pressure: See item 7.6.

f) Whether the conveyor belt tension is correct: see item 7.5.

g) Whether the driveshaft engaging ends are mounted in the correct position: See item 5.2.

B) Engaging the Lancer

Engaging terminal bushing change (if necessary):

Depending on the diameter of the engaging pin used on the tractor drawbar, assemble one of the bushings (2 or 3), with different inside diameters, supplied with the Lancer, in the header end:

- Bushing (2): Ø33 mm.
- Bushing (3): Ø41 mm.

To replace the bushing:

a) Remove the retaining ring (1) and remove the bushing.

b) Assemble the other bushing and fasten it with the retaining ring (1).

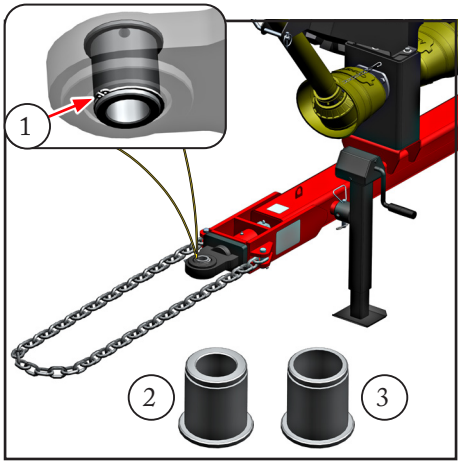

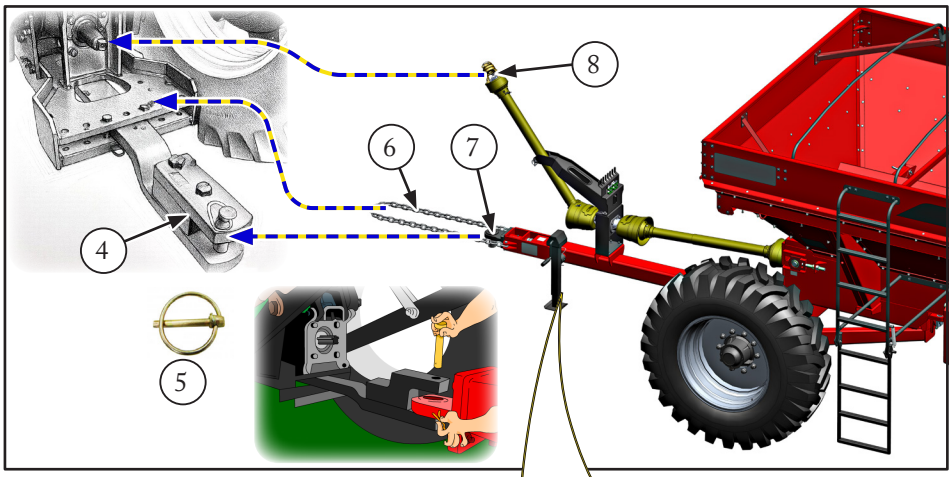

Lancer engaging

a) Drive the tractor so that the drawbar (4) approaches the engaging (7), aligned.

b) Turn the crank of the jack (10) until the engaging terminal (7) stays at the same height as the drawbar (4).

c) Check the longitudinal leveling of the header: Ideally, it should be as parallel as possible to the ground, observing it from the side.

If necessary, change the height of the tractor drawbar (4): Refer to the respective manual, if necessary.

d) Complete tractor approach and assemble engaging pin with a suitable latch (5).

e) Put the jack (10) in transport position (horizontal). To do this, remove the pin (9), rotate the jack to the horizontal position, and reinstall the pin (9).

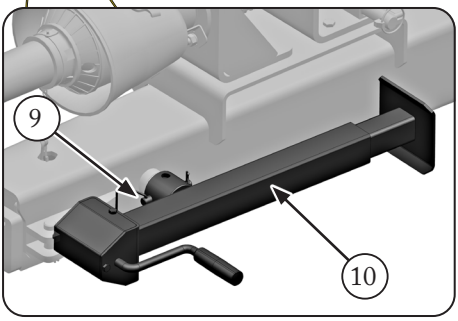

NOTE: *In both positions of the jack (vertical and horizontal), always install the pin (9).*

f) Connect the header safety chain (6) to a structural point of the tractor: The drawbar support (4) is usually used.

g) Connect driveshaft (8) to tractor PTO axle: see instructions on next item.

NOTE:

- *The driveshaft has a fuse bolt (11). This screw breaks in case of overload or mechanical lock in the driven systems.*

In these cases, replace the fuse bolt with an original item with the same breaking load.

- *About the correct use of the PTO, follow the recommendations in your tractor's manual.*

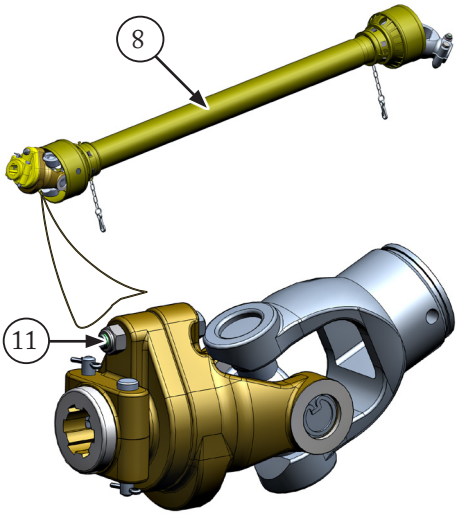

C) Disengaging the Lancer

Proceed in reverse to the engaging, noting the following points:

- Disengage the Lancer on flat, level, and firm ground. **Chock the wheels securely to ensure that the Lancer will not move after disengaging**.
- Turn the jack to the vertical position and lock it as described.

5.2 - Driveshaft assembly, adjustments, and working angle

NOTE:

When disengaging the driveshaft (1), always secure it on the support with the pin(2).

When attaching the Lancer to a specific tractor for the first time, check that the driveshaft has the correct length.

a) Engage the Lancer to the tractor.

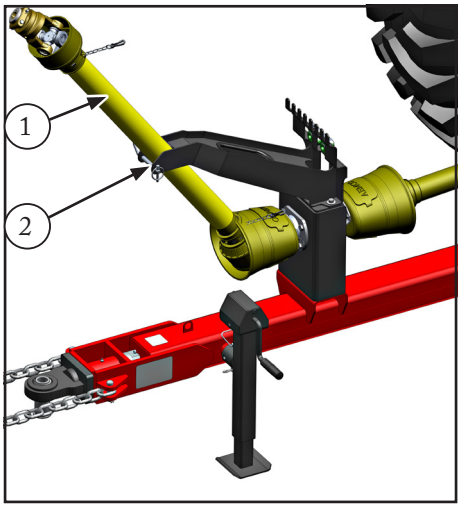

b) Separate the driveshaft sections: the front, axle (1a) and the rear, tubular (1b).

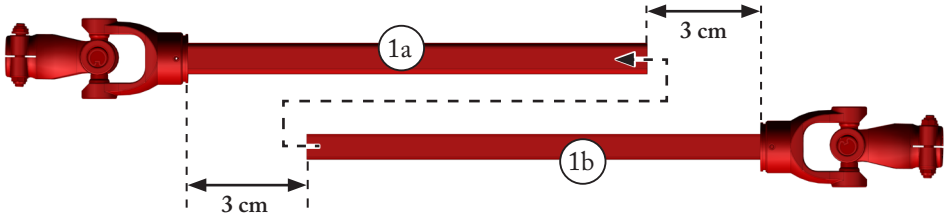

c) Connect the front section (1a) to the PTO axle; the rear section (1b) must remain connected to the Lancer.

d) Place the driveshaft sections side by side, as shown in the figure above.

e) Check that there is a minimum clearance of **3 cm** at each end; if the clearance is less than **3 cm**, mark the tube (1b) and the axle (1a) at the points where they must be cut.

f) Cut the parts of the driveshaft to the same extent: The tube (1b), the axle (1a) and the protective covers (1c).

g) With a file, remove all burrs, resulting from the cuts.

h) Lubricate the driveshaft axle (1a) with grease.

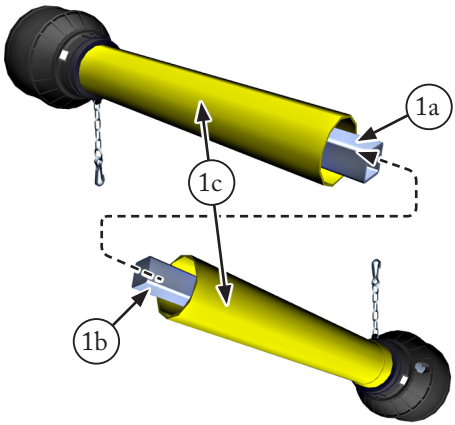

NOTE:

On square-profile tube and axle driveshafts, the terminals (3) must be assembled aligned.

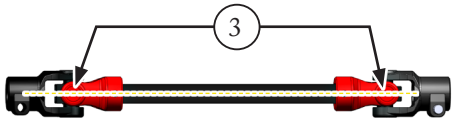

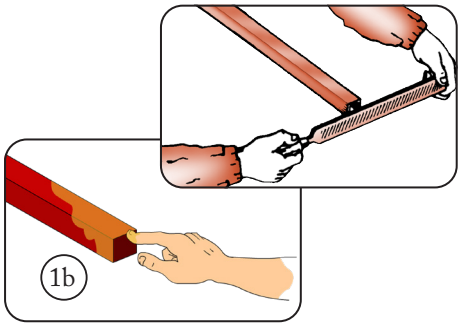

6.1 - Operation initial instructions

- Only engage the PTO during Lancer operation; disengage it during maneuvers and while driving in transport mode.
- In operation, the angle of inclination of the driveshaft must not exceed 30°. Thus, turn PTO off during closed turn maneuvers.

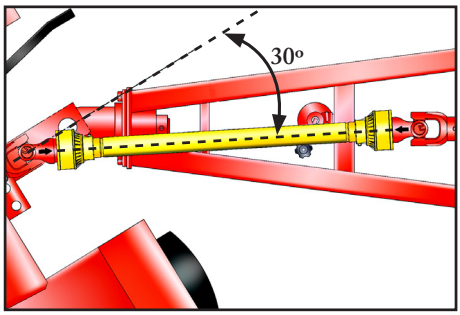

6.2 - Tractor speed

The correct tractor travel speed is one of the factors that most influences the product application rate, that is, kilograms per hectare (kg/ha).

Tractors normally do not have a speedometer, but they do have a tachometer. Engine speed, according to the previous item, should be such that the PTO speed is 540 rpm.

Knowing the engine rotation, determine the tractor speed from a sticker containing a table with a graphical scale indicating the speed at various engine speeds for each gear.

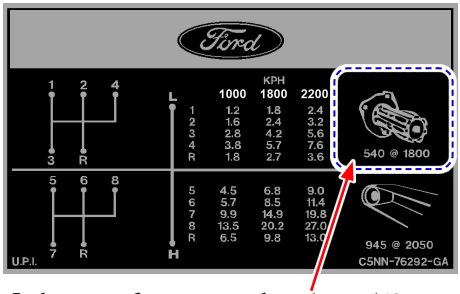

Indication of engine speed to obtain 540 rpm at PTO: Valid only as an example.

In case there isn't, look this information up in the tractor's manual.

As an example, see the table below, considering that the PTO delivers 540 rpm with the engine at 1,800 rpm.

In the 1,800 rpm line, see the speed developed (km/h) for each gear.

Select a gear that provides the speed that is as close as possible to the desired one.

Gear Rotation (rpm)	Speed (km/h)							
	1st	2nd	3rd	4th	5th	6th	7th	8th
1400	1.6	2.4	4.4	5.3	6.6	9.7	17.8	21.9
1800	2.1	3.1	5.6	6.9	8.5	12.5	22.9	28.1
2100	2.5	3.7	6.8	8.4	10.4	15.3	28.0	34.4

Table valid as an example only

6.3 - Funnel change

There are two models of funnels, specific to each type of distributed product:

1. Funnel for organic fertilizers, such as cattle manure, pigs and chickens (including poultry litter).
2. Funnel for powder products, such as limestone, plaster and others.

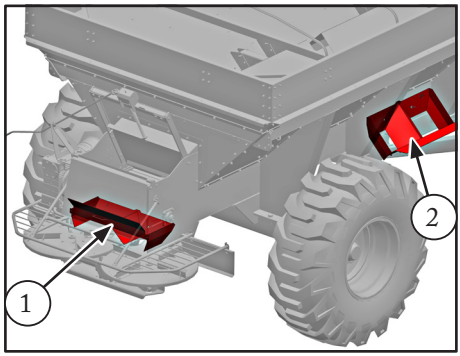

ATTENTION!

Before performing any procedure, keep the Lancer stationary, shut off the tractor engine and remove the ignition key from the contact.

a) Remove the locks (3).

b) Raise the cover (4), tilting it fully forward.

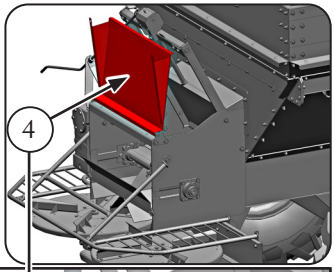

ATTENTION!

Take the necessary precautions to prevent the cover (4) from falling due to external forces, such as wind. Risk of serious injury.

c) Move the funnel (1 or 2) rearward until it uncouples, then remove it from the Lancer. Ask another person for assistance.

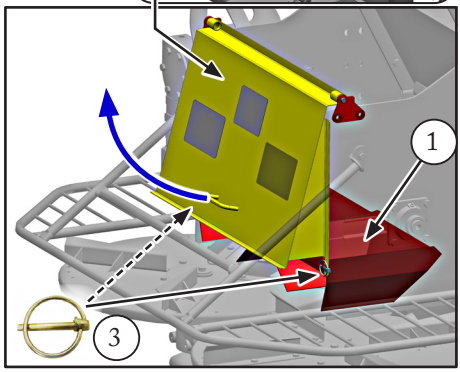

NOTE:

It is not necessary to remove the bow of protection (5).

d) Follow the procedure in reverse order to install the other funnel.

e) Attach the funnel not in use on the right side of the tank with the latches (6) and nuts (7).

f) Close the cover (4) and mount the latches (3).

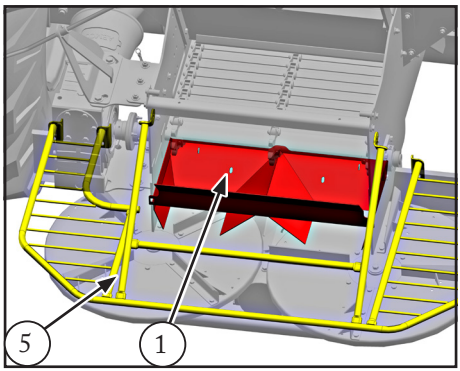

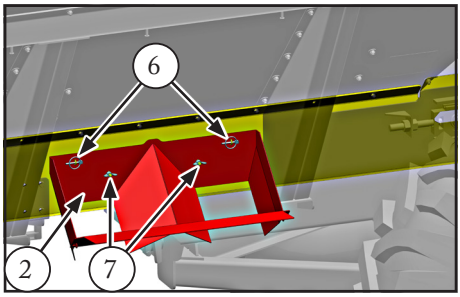

6.4 - Conveyor belt deflector gutters height

- The gutters (1) regulate the pressure of the product on the conveyor belt (2).
- When distributing organic fertilizer, remove the gutters (1).
- The higher positions of the gutters let the product flow more freely on the conveyor belt.
- Lower positions decrease the weight of the product on the conveyor.

To adjust:

a) Remove latches and pins (3 and 4).
b) Position the gutter at the desired height.
c) Reinstall pins (3 and 4) in corresponding positions.

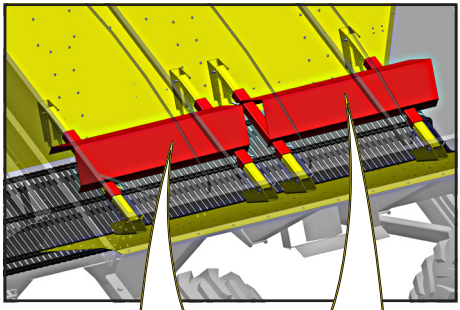

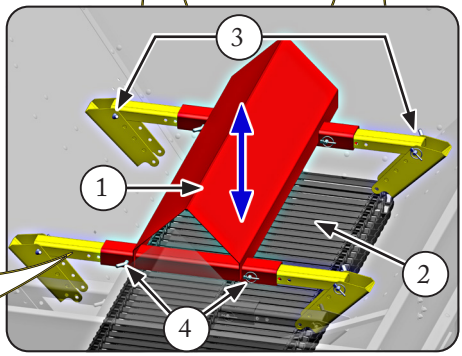

5 gutters height options:

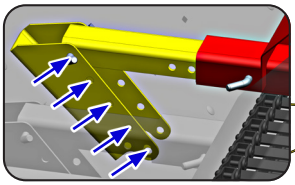

6.5 - Conveyor belt speed

The conveyor belt speed affects the product dosing. Depending on the dosing and the physical characteristics of the product, select a speed that ensures a uniform feed to the distribution discs:

- Overspeeding makes the product build up at the rear of the tank, and the product may overflow.
- A very low speed may result in insufficient feeding of the discs, affecting the dosing.

Change conveyor belt speed by changing chain position (4) on left side transmission housing:

a) Remove the protective cap (1). To do this, remove the nuts and bolts (2).

b) Loosen the nut (2) to release tensioner roller (3) and the chain (4).

c) Position chain (4) over gears (E) as desired conveyor belt speed:

Assemblies / Conveyor belt speed	Gears:	
	Driven shaft	Drive shaft
A / Low	E1	Ea
B / Medium	E2	Eb
C / High	E3	Ec

d) Adjust and lubricate chain (4) as described in item 7.4.

e) Refit the cap (1).

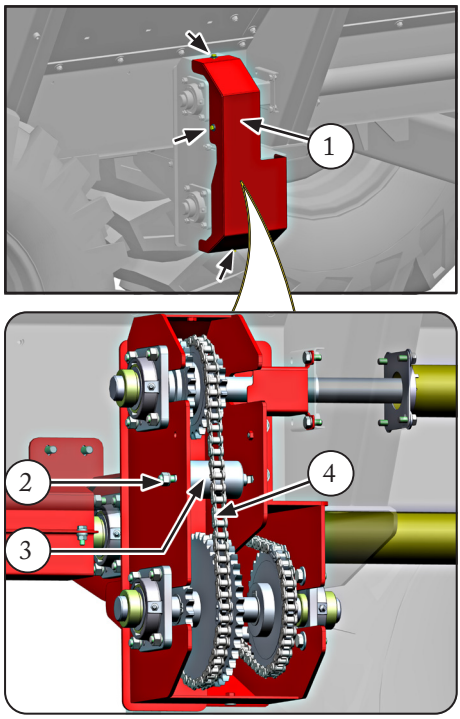

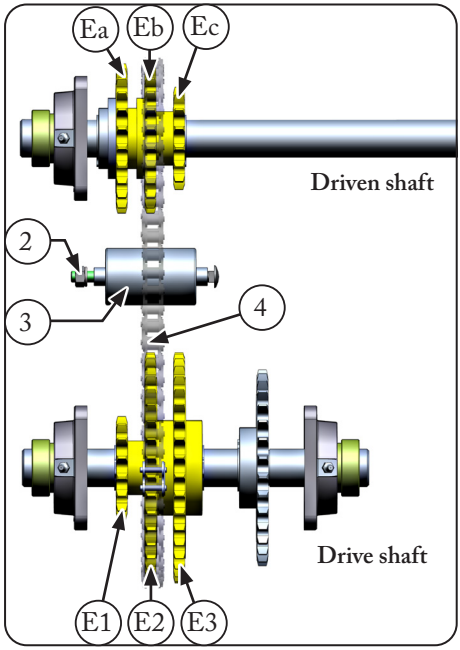

6.6 - Opening of the dosing gate

Using the crank(1) and the dosing gate (2), you can regulate the product flow deposited by the conveyor on the distribution discs, thus determining the application rate (kg/ha).

The adjustment reference is the scale number (3) that is aligned with the upper edge (2a) on the gate.

The scale (3) goes from "0 to 40".

However, these numbers do not designate dosage values: They are only references for use in the adjustments.

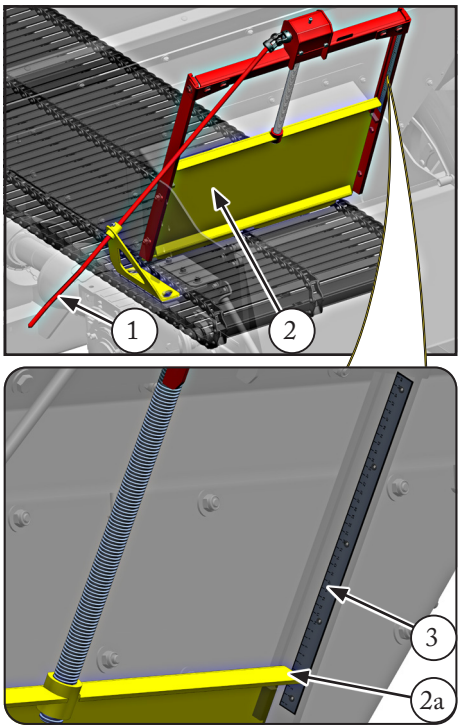

6.7 - Product application dosing test

As the characteristics of organic and powder products (dry and wet) vary greatly, it is necessary to carry out practical field tests (tests) in order to obtain adjustment parameters.

Next, we suggest a dosing test based on the Lancer displacement, to apply a certain amount of product.

Valid data only as an example, considering:

- *Desired dosing (or application rate): 400 kg/ha.*
- *Desired speed: 10 km/h.*
- *Effective application width (see item 6.10): 15 m.*
- *Quantity of product to be used in the test: 200 kg.*

Formula to calculate the traveled distance:

$$\text{Distance covered in meters} = \frac{\text{Amount of product in kg placed in the Lancer Organico} \times \text{10,000 (constant)}}{\text{Desired application rate in kg/ha} \times \text{Useful width in meters}}$$

To carry out the test:

a) Put 200 kg of product in the Lancer tank.

b) Substitute the data into the formula above:

$$\text{Distance covered} = \frac{\text{200 kg x 10,000}}{\text{400 kg/ha x 15 m}}$$

Distance covered = 333 m

Conclusion: The Lancer must empty the product placed in the tank upon completing 333 meters at a speed of 10 km/h*.

- If the product runs out after approximately 333 meters, the adjustments are correct: Start the application.
- If the Lancer empties before traveling the calculated distance (333 m), reduce the dosing gate opening or increase the travel speed.
- If the Lancer empties after traveling the calculated distance (333 m), increase the dosing gate opening and/or reduce travel speed.
- Repeat the tests until setting the desired dosing.

NOTE:

- **Travel speed does not enter the above calculation. However, it is a fundamental parameter: During the entire operation the same speed (constant) practiced in the dosing tests (tests) must be maintained.*
- *When changing the dosing gate opening, check the need to change the conveyor belt speed: See item 6.5.*
- *A larger amount of product may be used in the Lancer (more than 200 kg), resulting in greater test accuracy. In this case, change the value of 200 kg in the formula to the weight of the product used in the test.*

c) After obtaining application data with the practical test and calculation, we suggest recording these data in a table, so that it can be used in the future as reference or starting point in the adjustment:

Product	Rate (kg/ha)	Speed (km/h)	Distribution width (m)	Conveyor belt speed: A, B or C	Gate opening (scale number)

6.8 - Distribution discs blades angle

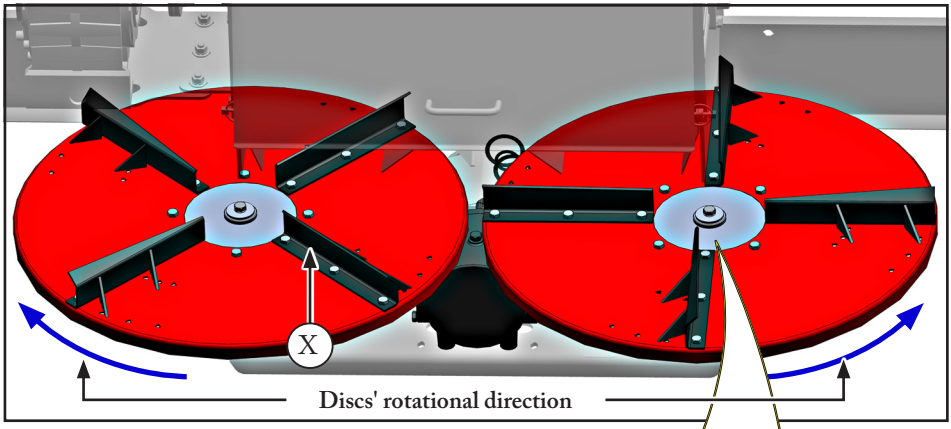

- Adjusting the blades angle influences the uniformity of the distribution cross profile.
- The blades are not interchangeable between the RH and LH discs.
- The concave side (X) of the blades must face the direction of rotation.
- The blades can be adjusted at four angles from position "I" (fully retracted) to position "IV" (fully advanced).

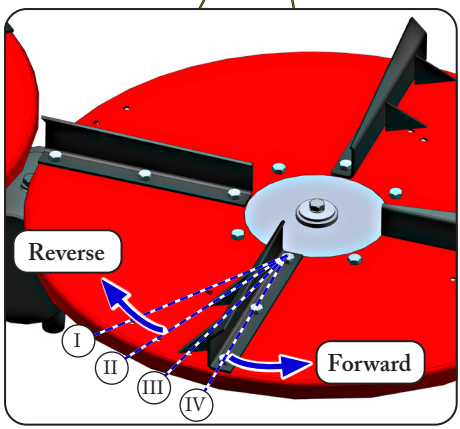

This image shows the right disc. To the left side the items are the same, but symmetrically opposite.

IMPORTANT:

All four blades on both discs must be set to the same position (angle) from "I to IV".

Adjustment procedure:

ATTENTION!

Before carrying out any procedure, keep the Lancer stationary, shut off the tractor engine and remove the key switch from the contact.

a) Loosen (do not remove) the nut from the internal bolt (2).

b) Remove bolts (3 and 4).

c) Position the blade according to the desired angle: "I, II, III or IV". See previous guidelines.

d) Assemble the bolts, washers and nuts (3 and 4).

e) Tighten the bolt nuts (2, 3 and 4).

f) Proceed in the same way with the other blades and then with the disc on the opposite side.

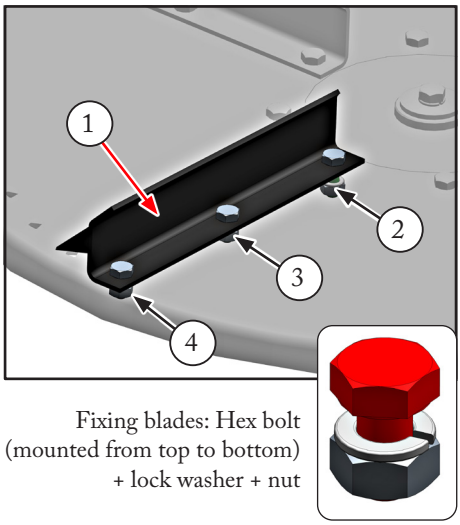

Fixing blades: Hex bolt (mounted from top to bottom) + lock washer + nut

6.9 - Distribution discs rotation

The specified disk rotation (see item 3.6) will be obtained with PTO activated at 540 rpm.

To verify PTO rotation is correct, use the following ways:

A. Check for a possible indication on the tractor tachometer.

B. A speed scale sticker on the tractor.

C. Use a tachometer.

D. Refer to your tractor manual, if you still have any questions.

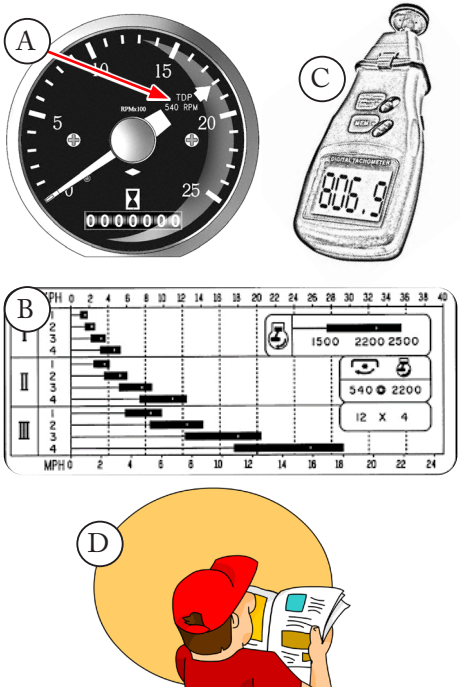

6.10 - Controlling the distribution width

A) Overlapping of passes

For a perfect and even distribution it's convenient to overlap the previous pass. In this way, the deficiency occurring at the extremities of the transverse profile is compensated for.

NOTE:

The useful width consists of the distance between a stride and the next:

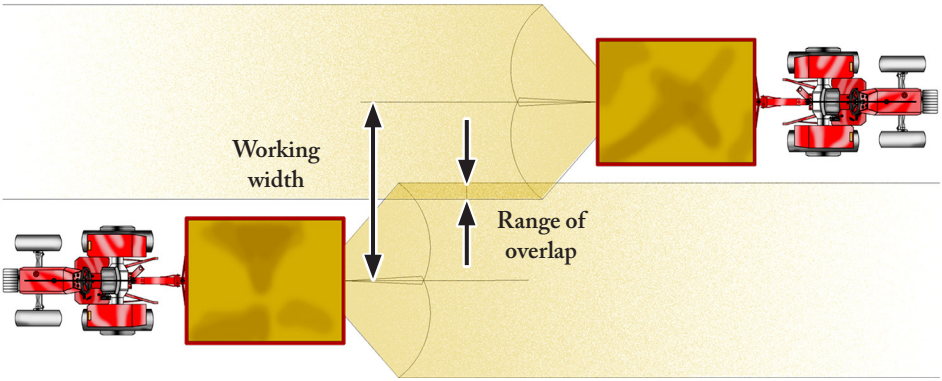

It is fundamental that the distribution width is maintained constant and exact, in order to provide a profile of uniform distribution in the application rate.

There are two ways to perform this control: using markers or GPS control.

B) Use of markers (stakes)

The lateral spacing between markers must be equal to the working width.

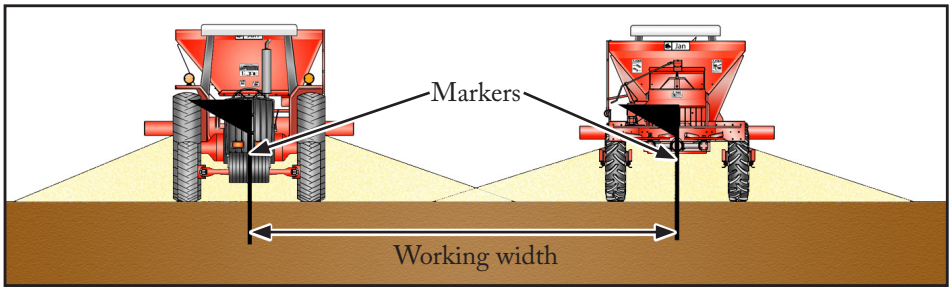

C) With GPS control

Jan offers as optional the Hexagon ISO system controlled by GPS (Global Positioning System) that, through a light-bar display, assists with directional control to maintain the precise distribution width with maximum convenience and high performance.

This electronic system can be combined with distribution rate control (fixed or variable).

- The control of fixed application rate varies the product flow according of the tractor´s speed variation, in other words, it maintains the application rate constant and uniform (fixed).



- The control of variable rate provides specific application rates in each place of the field, based on yield maps elaborated during the crop, in the concept of Precision Agriculture.

6.11 - Distribution profile uniformity control

- For organic fertilizers, use the visual method.

  To make this method more practical and accurate, one can use a tarp over the distribution width: After passing over the tarp, with the distribution engaged, evaluate the uniformity.

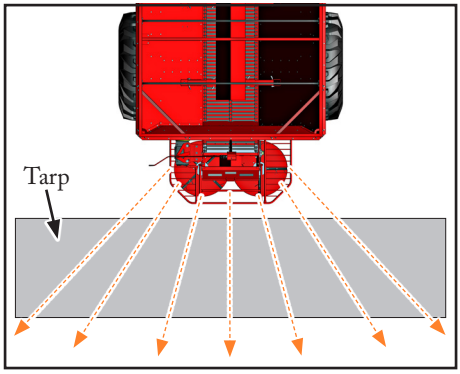

- For powdered products such as limestone and plaster (dry or wet): For these products, it is recommended to use some form of measurement, as described below:

A) Transverse distribution profile uniformity test with collection trays

The tray test allows the uniformity of application across the desired distribution width to be evaluated, that is, the uniformity of the transverse profile.

See the procedure below for performing the test, using a distribution width of 16 meters:

a) Position the eight trays (1) with collection grids (2) in a straight line on the ground, with a spacing of 16 / 7 = 2.3 m (230 cm).

b) Identify each tray with number from 1 to 8 for position reference.

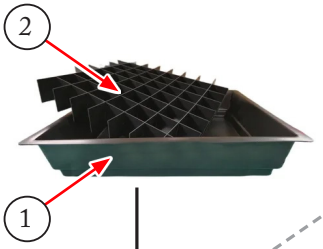

c) Position the Lancer:

- 20 meters before the line of trays.
- Perpendicular to the line of trays.
- Aligned with the gap between trays 4 and 5.
- With the hopper filled with product.
- With the application rate and conveyor belt calibrated as described in the previous items.

d) Start distribution and drive the Lancer in a straight line, crossing the line of trays. Make sure that the conveyor speed and disc speed have stabilized.

e) Stop and shut down the equipment 20 meters after passing the trays.

f) Using the scale (item 3 of the kit), weigh the product collected in each tray in the order in which they are arranged on the ground (1 to 8).

Based on the amount of product collected in each tray (in grams), prepare a chart to visualize distribution uniformity. See the example below:

Evaluation of the transverse profile and methods for correction, if necessary

We will see that the amount of product distributed is greater in the central trays 4 and 5, gradually decreasing toward the ends of the application range.

Compare the prepared chart with the ideal profile (desired and/or recommended according to agronomic guidance).

If there is a significant difference between the obtained profile and the ideal profile, make one or both of the following adjustments:

- Disc speed: see item 6.9.
- Correct assembly of blades and angle of blades: See item 6.8.

After achieving the ideal profile, the equipment is ready to begin product application.

Trays / Weight (grams)	1	2	3	4	5	6	7	8
160								
140								
120								
100								
80								
60								
40								
20								

B) Calibration kit

NOTE:

The kit is not supplied with the Lancer and must be purchased separately.

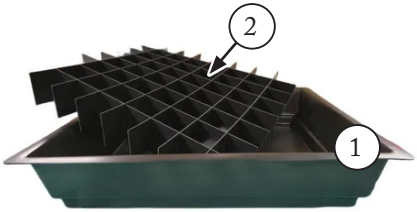

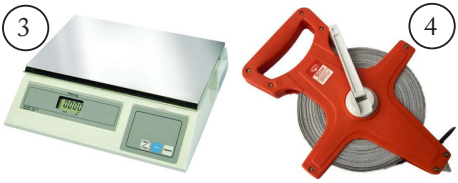

The calibration kit contains:

1. Trays: eight units. A larger quantity may be purchased upon request.
2. Collection grids: eight units.
3. Precision scale.
4. 20 or 30 meter tape measure.

7.1 - Periodical maintenance plan

After the first 30 work hours:	See item
Check the conveyor belt tension and adjust it if necessary.	7.5 B
Check tire inflation pressure: calibrate them if necessary.	7.6
Make the first oil change from the conveyor reducer.	7.3 D
Make the first oil change for the triple-disc transmission gearbox.	
Check the tightness of nuts and bolts, including wheel fasteners.	7.9 B

Maintenance item / Frequency: *Use the tractor hour meter to track the Lancer's operating hours.*	Every 10 h or daily	Every 50 h or weekly	Every 200 h or monthly	Every 1,000 h or annually	See item:
General maintenance items					
Lubricate all grease fittings.	X				7.2
Lubricate the driveshaft tube with grease.		X			
Clean the Lancer after each working day to prevent corrosion of the metal components that come into contact with the product.	X				7.10
Clean and lubricate the side transmission chain.	X				7.4
Check the tightness of nuts and bolts, including wheel fasteners.		X			7.9 B
Distribution system, conveyor belt and tank					
Clean and lubricate the threads of the product flow control gate and the conveyor belt tensioners.		X			7.2
Check the conveyor belt tension and adjust it if necessary.		X			7.5 B
Inspect the blades at the end of each working day: replace them when necessary.	X				4.8 and 6.8

Maintenance item / Frequency: *Use the tractor hour meter to track the Lancer's operating hours.*	Every 10 h or daily	Every 50 h or weekly	Every 200 h or monthly	Every 1,000 h or annually	See item:
Transmissions (drives)					
Check the conveyor belt reducer oil level and top it up if necessary.		X			7.3 C
Check the oil level in the triple gearbox that drives the discs and top it up if necessary.		X			
Change the conveyor belt reducer oil.				X	7.3 D
Change the oil in the triple gearbox that drives the discs.				X	
Lubricate the drive chains.	X				7.4 A
Adjust the drive chains clearance, if necessary.		X			7.4 B
Wheels: tires and hubs					
Check tire inflation pressure: calibrate them if necessary,		X			7.6
Disassemble, clean, inspect and lubricate the wheel hubs.				X	7.7
Check the front wheel toe-in and adjust it if necessary.			X		7.8
Implement preservation during inactive periods					
After the operating season, prepare the Lancer for the inactive period (off-season).				X	7.10 A

Every 1,000 operating hours - Request your Jan Dealer
A complete inspection of the transmissions: the disc triple gearbox and the conveyor drive reducer.
Complete overhaul of conveyor belt assembly, bearings, rollers and adjustment system.

7.2 - Grease lubrication (daily)

A) Recommended grease table

Manufacturer	Specified product
Ipiranga	Ipiflex 2 (Used at the factory)
Atlantic	Litholine MP 2
Shell	Retinax or Alvania EP 2
Esso	Beacon EP 2
Petrobrás	Lubrax GMA-2
Texaco	Multifak MP 2 or Marfak

B) Identification of grease lubrication fittings

IMPORTANT:

Before applying grease, clean the grease fittings.

1. Driveshafts: There are 4 driveshafts (1c, 1d, 1e and 1f) in the next image. One grease fitting at each universal joint cross (1a). To lubricate the bar (1b), separate the driveshaft sections.

   NOTE: When assembling the driveshafts, observe the alignment between the universal join cross forks. See item 5.2.

2. Engaging terminal: 2 grease fittings.
3. Header: 3 grease fittings.
4. Front axle - hinge: 2 grease fittings.
5. Front wheel hub kingpin: 1 grease cup in each side.
6. Front and rear conveyor belt bearing housings: 1 grease cup in each bearing housing.
7. Dosing gate control: 3 grease fittings. Lubricate the threads with oil.
8. Central axle bearing housings: 4 grease fittings.

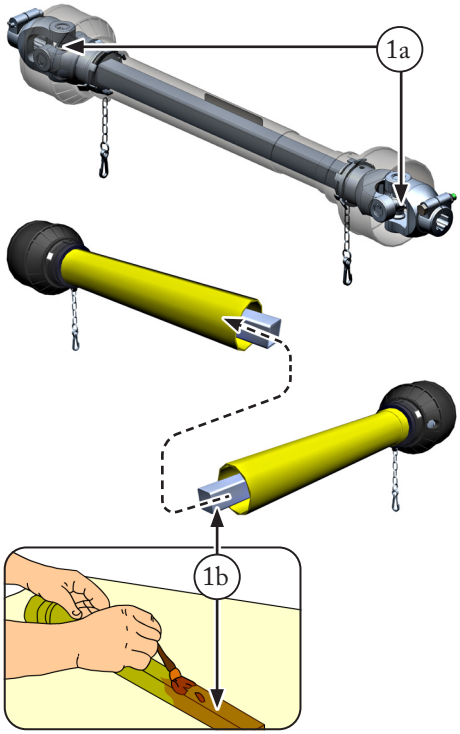

9. Lateral axle bearing housings: 2 grease fittings.
10. Conveyor belt speed selector housing lower axle: 2 grease fittings.

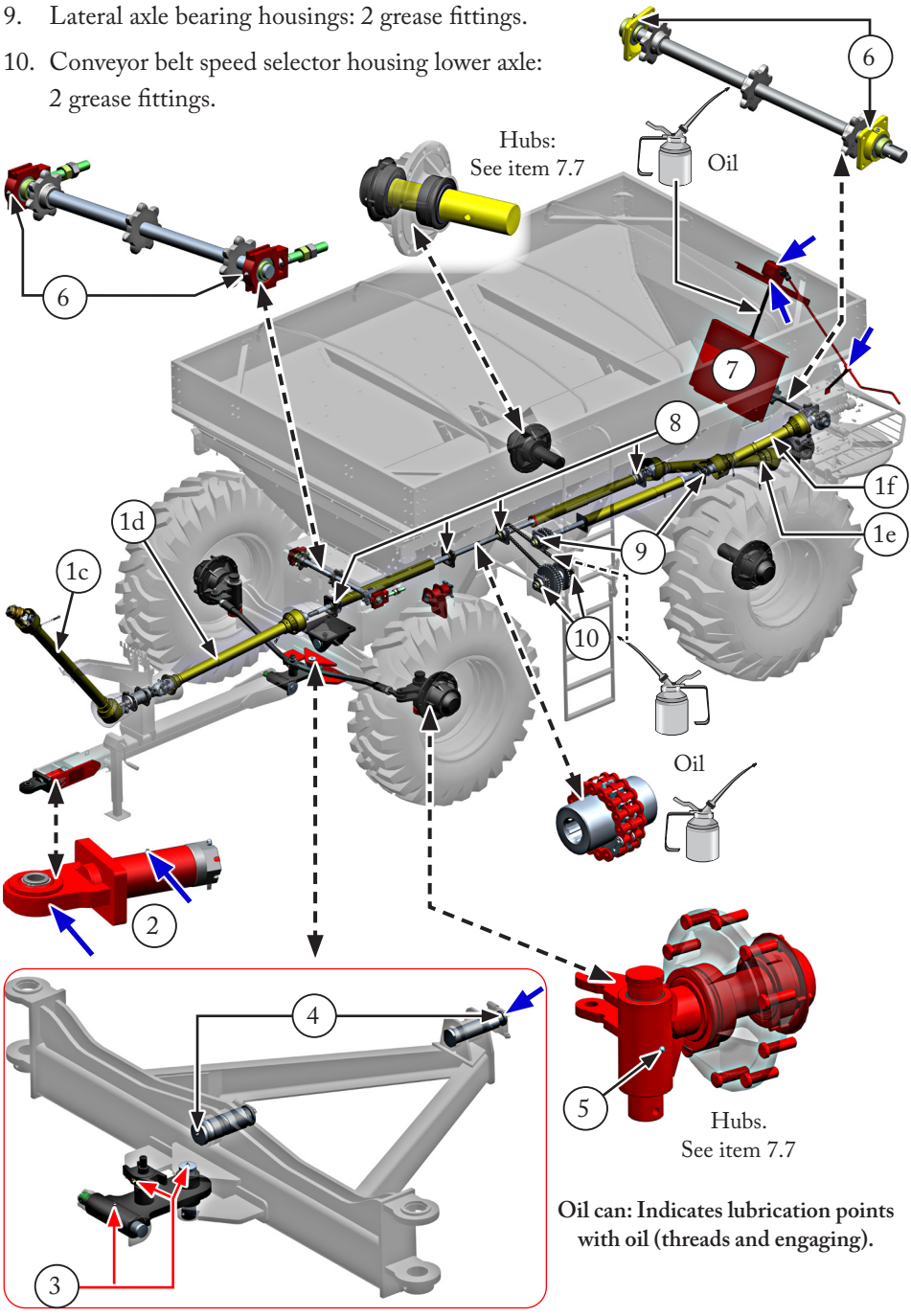

Oil can: Indicates lubrication points with oil (threads and engaging).

7.3 - Gearbox lubrication

A) Recommended oils

Classification: SAE 140 - API GL 4

Manufacturer	Specified products
Ipiranga	Ipitur AW 68 (Used at the factory) Ipirgerol SP SAE 140
Texaco	Universal EP SAE 140 Multigear EP SAE 85W 140 Multigear STO SAE 85W 140 Multigear LS SAE 85W 140 Meropa EP 320
Shell	Spirax AX SAE 85W 140 Spirax G SAE 140 Spirax ST SAE 85W 140
Esso	Gear Oil GX 85W 140 Gear Oil GX 140 Gear Oil GP 140
Petrobrás	Lubrax TRM-5 SAE 140 Lubrax GOLD 85W 140 Lubrax GL-5 SAE 140 Lubrax GL-5 SAE 85W 140
Petronas	PAKO R320 EP

B) Oil capacity

- Conveyor belt reducer: 6.3 liters.
- Triple distribution disc gearbox (total): 3.5 liters.

C) Oil level check

With the Lancer level, the oil must reach the reducer sight glass (2a) and the mounting holes for the plugs (2b) of the triple housing.

To top up the level, if necessary:

- Remove the filler plug (1) and add oil until the level reaches the recommended level.

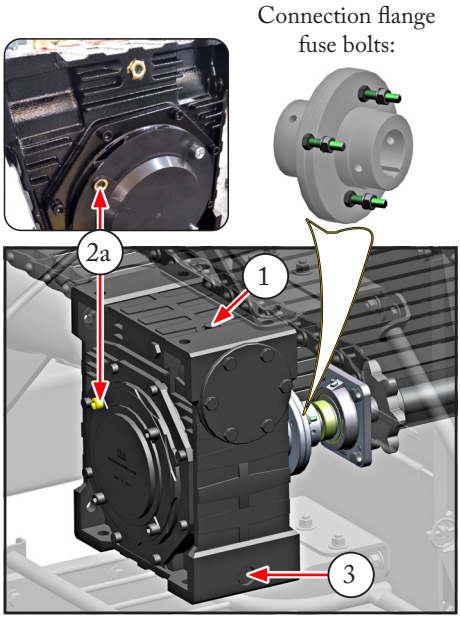

Conveyor reducer

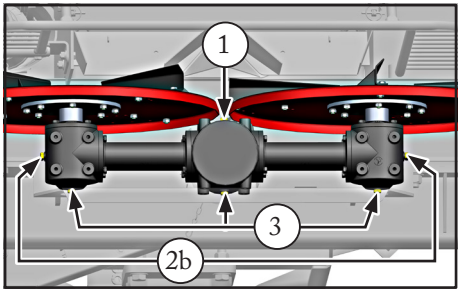

Triple gearbox, distribution disc drive

General observations:

- *The fill plug (1) has a breather. Keep it clean at all times.*
- *When topping up the oil, always use oil of the same brand and classification.*

Observation - triple gearbox:

- *To check the level, remove both side plugs (2b).*

D) Oil change

a) With the Lancer level, place a collection container under the drain plug(s) (3).

b) Remove the filler plug (1) and the level plug(s) (2) and drain plug(s) (3) to drain the oil.

NOTE: On the triple gearbox, remove all three drain plugs (3).

c) After draining the oil, reinstall the drain plug(s) (3).

d) Refill the gearbox with the recommended oil until the level is reached as instructed in the previous item C) Oil check level.

e) Reinstall the removed plugs.

7.4 - Transmission chains maintenance

As a result of the environment in which the transmission chain works (dust usually abrasive), it requires some simple maintenance measures that will extend chain life and ensure good operation.

Access the chains:

Remove cover (1) by removing cap screws and washers in positions indicated by arrows.

C1. Conveyor belt speed selector housing drive chain.

C2. Selector housing chain.

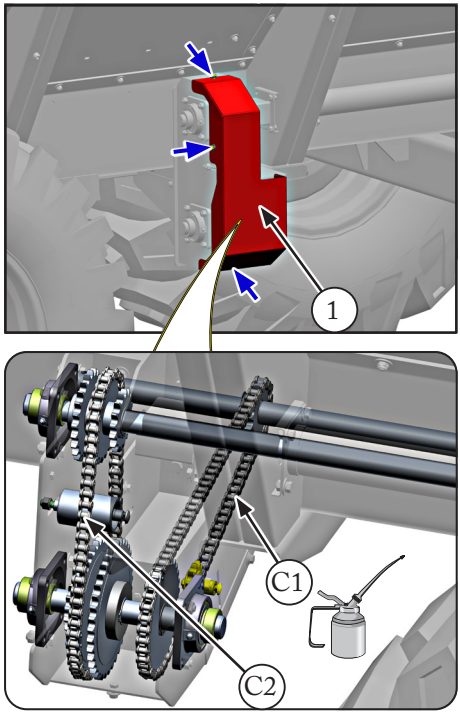

A) Cleaning and lubrication

Keep the chain clean. Whenever necessary, wash it with a brush and kerosene or diesel oil.

Then dry the chain with compressed air or allow it to drain naturally.

Apply SAE 90 or 140 transmission oil or aerosol-type lubricants specifically designed for chains, if available.

To apply oil use an oil can.

NOTE:

Do not apply grease on the chain because it won't penetrate between the links and pins.

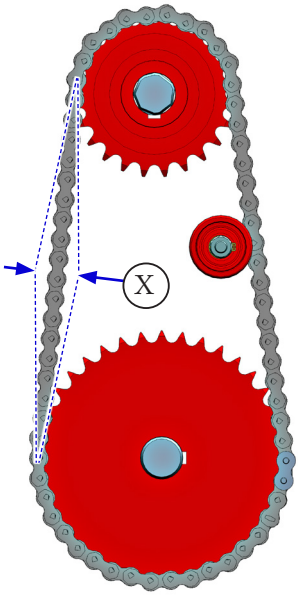

B) Checking and adjusting chain clearance

a) To check the chain clearance, move them to both sides in the center of the free passage indicated in the figure to the side.

Measure the total deflection (X), which corresponds to the chain clearance.

The deflection (X) must be **7 to 12 mm**. If it is outside this range, adjust the (s) chain(s):

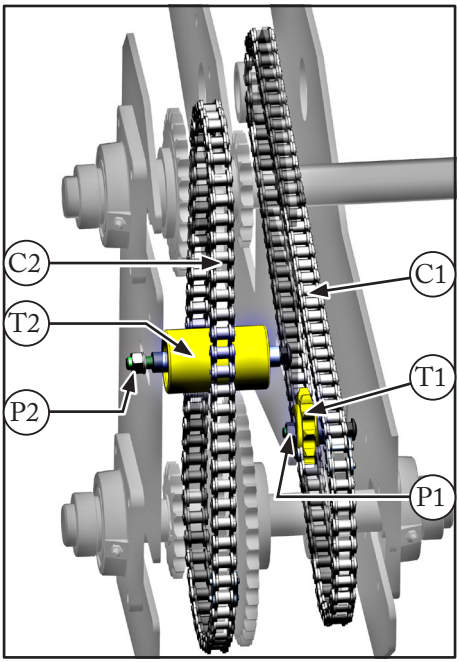

b) Chain (C1):

- Loosen the nut (P1).
- Move tension gear (T1) as necessary and retighten nut (P1).

c) Chain (C2):

- Loosen the nut (P2).
- Move tensioner roller (T2) as necessary and retighten (P2).

d) Make sure the adjustment has remained correct.

e) Replace the protective cover (1): See previous images.

7.5 - Conveyor belt adjustment and maintenance

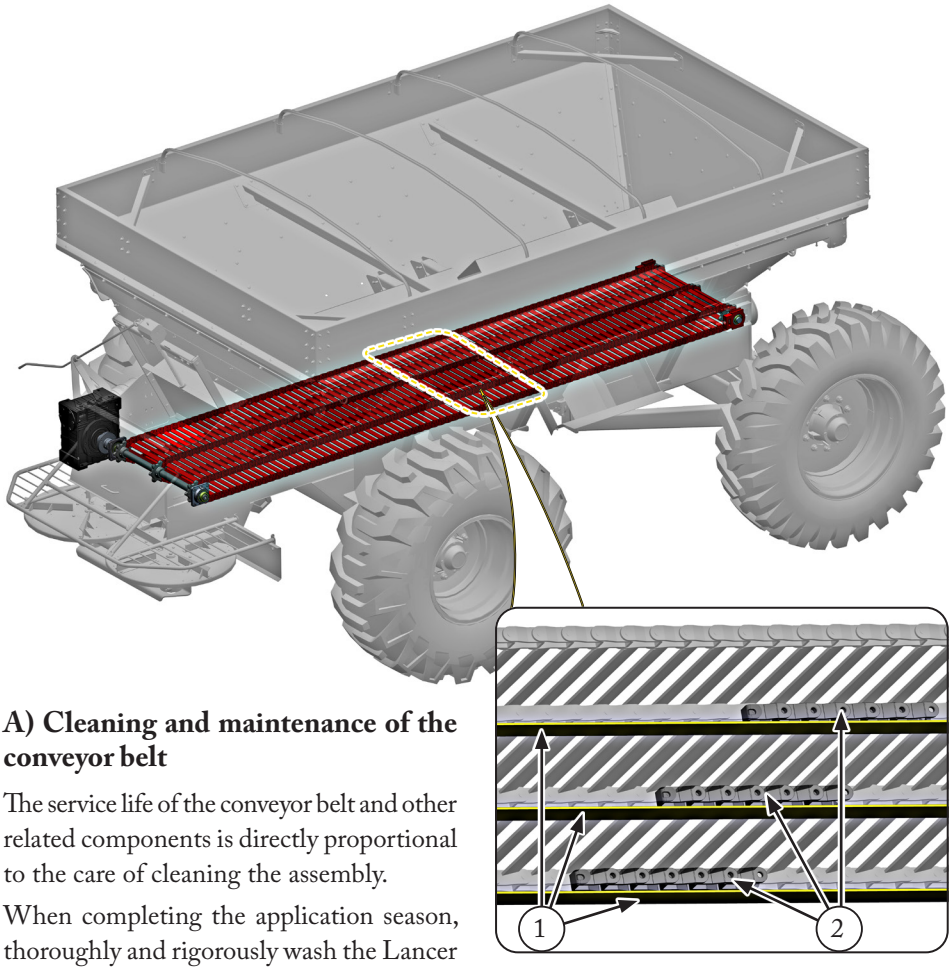

A) Cleaning and maintenance of the conveyor belt

The service life of the conveyor belt and other related components is directly proportional to the care of cleaning the assembly.

When completing the application season, thoroughly and rigorously wash the Lancer using a high-pressure washer.

Then provide the conditions for a complete drying, leaving the distributor in a sunny location for a whole day.

Then spray oil on the entire conveyor belt (2) and also on the surfaces whose paint was removed by contact with products.

B) Conveyor belt tension adjustment.

With the Lancer empty and the PTO disengaged, check the conveyor belt adjustment.

The links (2) should not drag on the tabs (1). It is acceptable that contact occurs between the parties only in the central region of the conveyor belt, highlighted in the figure above:

If necessary, perform the tightening across the side tensioners located on the front of the Lancer:

a) Clean and lubricate the thread of both tensioners.

b) Loosen the lock nut (3).

c) Turn the adjusting nut (4), moving the axle and front bearing housings (5) to obtain the correct conveyor belt adjustment (2).

NOTE: Make sure to make the adjustment equally on both tensioners: distance "D" must be the same on both tensioners, for the proper functioning of the conveyor chains and gears.

d) Retighten the locknut (3) on both tensioners.

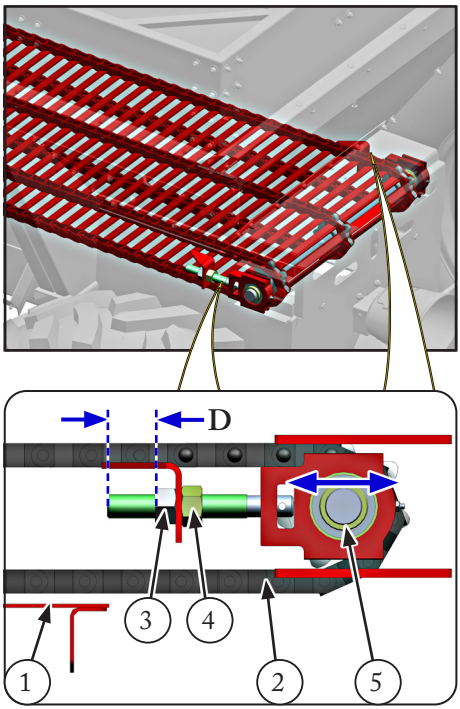

NOTE:

When the end of stroke of the threads of the tensioners is reached, the conveyor belt (2) should be shortened by removing some links. Then, adjust the conveyor belt as described above.

We recommend requesting this service from your Jan Reseller, as it is a good opportunity to perform a general overhaul, including bearings, gears, drive reducer and others.

7.6 - Tire inflation

Proper tire inflation has a significant impact on their service life.

Check tire pressure with the tires cold.

If necessary, inflate them.

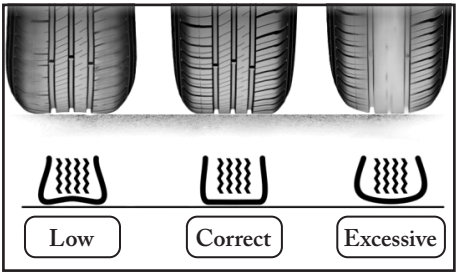

Recommended pressure:

Tire	Recommended pressure (pounds per square inch)
18.4-30 TM 95 (12 ply)	32
23.1-26 MB 39 (14 ply)	28

7.7 - Wheel hub maintenance

The wheel hubs must be disassembled; the parts washed in kerosene or diesel oil, inspected and reassembled; the bearing preload must be adjusted and the assembly must be lubricated.

Some front hub parts differ in shape from the rear hubs.

However, the procedure for both is identical:

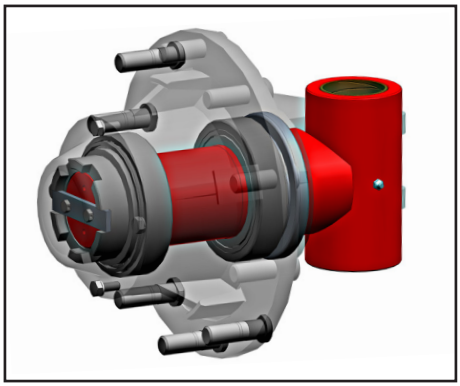

Front hubs

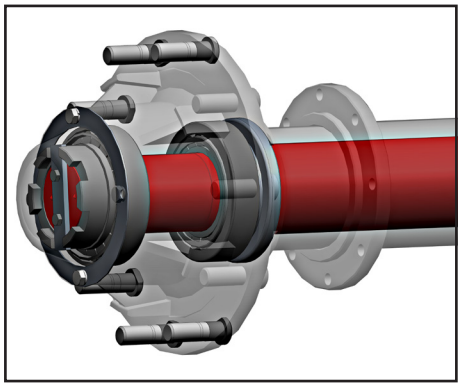

Rear hubs

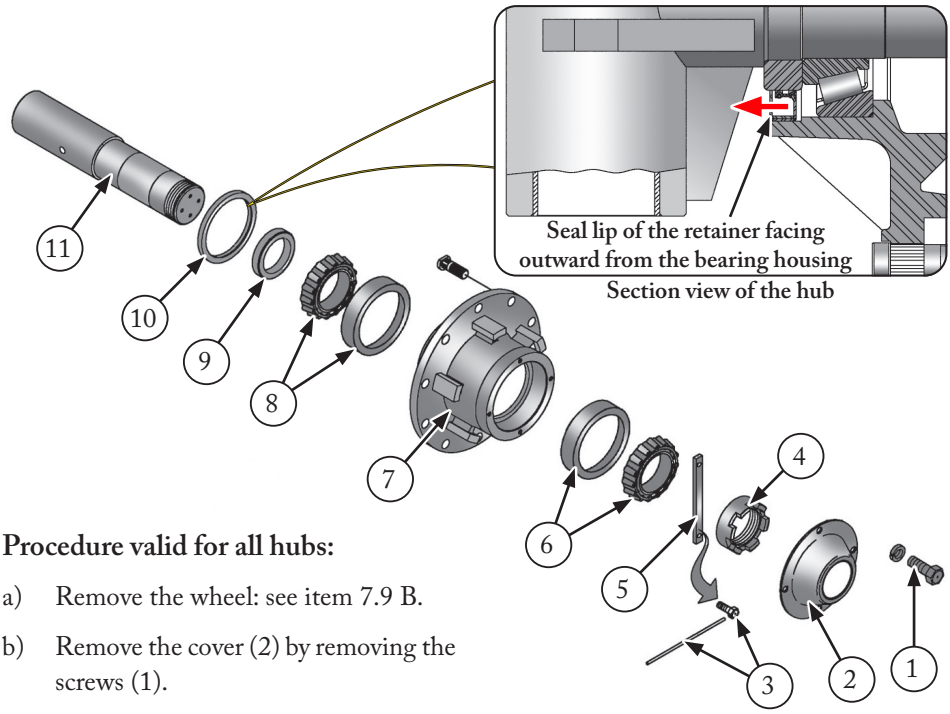

Procedure valid for all hubs:

a) Remove the wheel: see item 7.9 B.

b) Remove the cover (2) by removing the screws (1).

c) Remove the lock (5) by removing the bolts and the cotter pin (3).

d) Remove castle nut (4).

e) Remove the hub (7), bearings (6 and 8), and the remaining components. To do this, pull the hub (7).

f) Wash the parts using a brush and kerosene.

g) Inspect the components, replacing whatever is necessary.

Pay special attention to the retainer (10). If necessary, remove it destructively and assemble a new one.

Also check the condition of the ring (9), on which the retainer (10) runs: if necessary, also replace the ring.

IMPORTANT:

When installing the retainer (10), observe the correct side: the sealing lip must face outward from the bearing housing (see detail above).

h) Lubricate all parts with the types of grease recommended on item 7.2.

i) Install the hub following the reverse order.

j) Adjust the bearing preload (6 and 8): when installing the castle nut (4), tighten it until the hub offers slight resistance to rotation.

k) Install the lock (5) and bolts (3): lock them with wire.

l) Repeat the procedure for the remaining hubs on the other wheels.

7.8 - Front wheels toe-in adjustment

Toe-in (T - D) is the condition in which the wheels are closer together at the front (measurement D) than at the rear (measurement T).

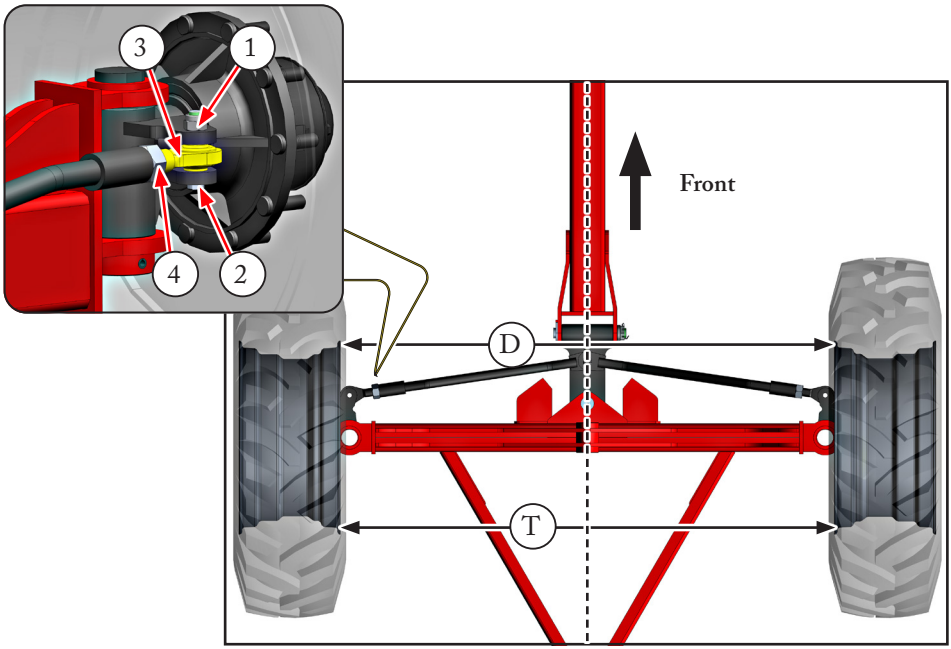

How to measure toe-in

a) Keep the header centered, that is, with the wheels aligned with the implement centerline.

b) With a tape measure, measure the front (D) and rear (T) distance. **The measurement should be made between the edge of the rims at the height of the axles.**

Toe-in (T - D) must be 5 to 10 mm.

To adjust:

a) Disconnect the tie rod end (3) from the steering arm, removing the nut (1) and bolt (2).

b) Loosen the locknut (4) and turn the end (3) as needed.

c) Reconnect the end (3) and check whether the toe-in is correct.
If necessary, disconnect the end (3) and turn it a few more turns.

NOTE:

If the toe-in is too far out of specification, make the adjustment evenly, on the steering bar on both sides of the axle.

d) Once the correct adjustment is obtained, reconnect the end using the screw (2) and the nut (1).

e) Tighten the nut (1) and the locknut (4).

7.9 - Removal and installation of the wheels

A) Lancer suspension

ATTENTION!

The Lancer axles must not be lifted simultaneously.

Do not perform any activity with the Lancer supported only by the jack! Position stands (2) with the required load capacity under the chassis, at the indicated positions:

- Carry out this procedure with the Lancer on flat, level ground.
- Ensure that the Lancer is completely immobilized using one of the following methods:

- Keep the Lancer fastened to the tractor (engine off and parking brake applied).
- Or place wooden chocks under the wheels that remain on the ground.



Image for reference only

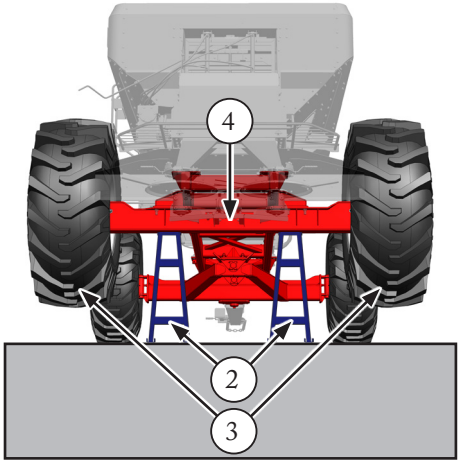

B) Wheel removal and installation

a) Loosen the wheel nuts (5) of the wheel(s) (3) to be removed.

b) Lift the axle with the jack (1), until the wheel(s) (3) are clear of the ground.

c) Position stands (2) under the Lancer chassis (4).

NOTE:

To remove only one of the wheels, lift and support only the side of the axle corresponding to the wheel to be removed.

d) Remove the nuts (5) and the wheel(s).

e) After reinstalling the wheel(s), raise the axle, remove the stands (2), lower the wheels to the ground, and perform final tightening of the nuts (5).

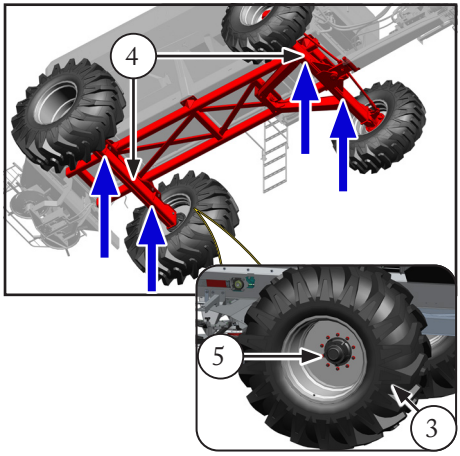

f) Apply the same procedure to both axles.

7.10 - Lancer cleaning and preservation

The proper conservation of agricultural equipment that operates with corrosive (organic or chemical) products depends mainly on frequent cleaning, periodic inspection and proper storage.

Neglecting these practices may result in accelerated corrosion, reduced service life, increased maintenance costs, and operational safety risks.

A) Implement preservation guidelines

- Clean the components immediately after completing operations, especially when they have come into contact with:

1. Fertilizers based on Chloride, Nitrogen, Phosphorus and Potassium (NPK).
2. Micronutrients, inoculants, or chemical soil amendments.

- Use plenty of clean water, completely removing residues, deposits, and accumulated dust.
- Avoid using harsh cleaning products, strong acids, or strong alkaline products.
- Whenever possible, perform washing followed by drying, avoiding prolonged residual moisture.



Image for reference only

Protection of surfaces with metallic coating (galvanization)

- Avoid "white rust" (zinc oxidation caused by retained moisture) and accelerated corrosion due to chemical fertilizers.
- Remove residue from metal surfaces by washing after use to neutralize corrosive salts:

1. After washing, dry the parts completely. Zinc requires exposure to dry air to form a stable zinc carbonate layer; retained moisture causes white oxidation.

2. Apply protective products to form a film that repels water and chemical residues.

- If the zinc layer suffers scratches or mechanical wear:

  Apply zinc-based protective products, in aerosol (spray), to touch up the areas where the base metal (steel) was exposed. This restores galvanic protection at the affected location.

Proper storage

- Store the equipment in a covered, dry, and ventilated area, preferably away from environments with fertilizer dust or corrosive atmosphere.
- Avoid storing the equipment with chemical product in the tank, even for short periods.

Use of protective products

- When preparing the Lancer for inactive periods and after performing a full wash, apply protective products to steel surfaces that have lost paint due to contact with the products.
- Example:

- Inside the tank, including the metallic conveyor belt.
- Distribution discs.

B) Corrective actions

Removal of deposits and residues

- Completely eliminate fertilizer deposits and chemical residues adhered to surfaces.
- At some points it may be necessary to use brushes to aid cleaning.
- Replace components when corrosion compromises structural integrity or safety.
- In periodic inspections, pay attention to critical points of material accumulation, such as welds, bolted joints, live corners and internal parts of the tank.



7.11 - Suggested spare parts for stock

Description and suggested quantity for stock	Part code	Identification
Oil for the conveyor belt reducer and the triple gearbox that drives the discs. 10 liters.	Commercial items. See items 7.2 A and 7.3 A for recommended products.	
Grease for grease lubrication points: 1kg.		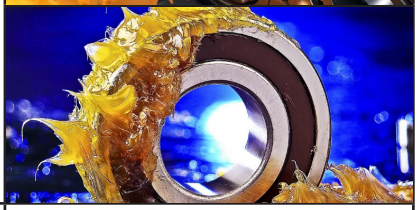
1. Bearings: Applied to the front and rear track axles and drive axles under the Lancer: 6 units.	68135505	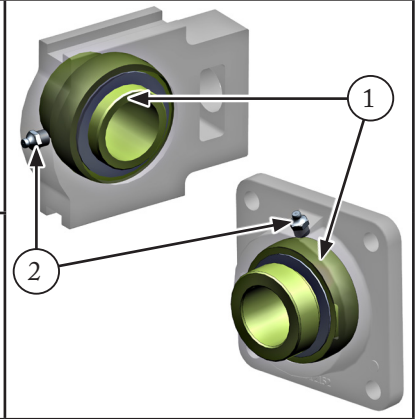
2. 45° grease cup: 2 units.	65070403	
3. Front driveshaft fuse bolt: 2 units.	60177526	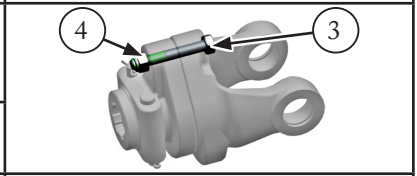
4. Bolt nut (3):	61410809	
5. Reducer flange fuse bolt: 3 units.	200000002234	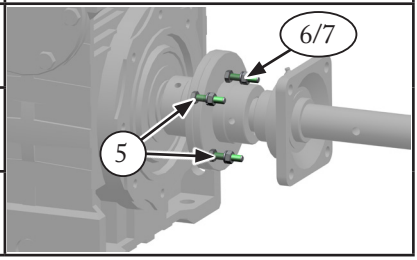
6. Bolt nuts (5): 3 units.	200000002829	
7. Bolt lock washers (5): 3 units.	62050706	

There is no product flow or it is not continuous. Check whether:

1. The dosage is set and adjusted correctly.
2. There are foreign objects near the flow control gate obstructing the outlet.
3. There is "tunnel" formation over the product outlet (excessive moisture). Check whether the conveyor belt protective deflectors located inside the tank are positioned at the proper height. If there are, arrange for the product to be dried before applying it.
4. It is possible to increase the opening on the flow control gate scale. If it is possible, increase the opening and select a higher speed of displacement in order not to change the application rate in kg/ha.
5. The transmission chains are assembled and adjusted correctly.
6. The conveyor belt or the bolts on the conveyor axles/reducer flanges are broken.
7. The product presents clods. If so, check the product quality and/or break up the clods using sieves.

The transverse distribution profile is poorly formed. Check whether:

1. The PTO rotation is of 540 rpm.
2. The Lancer adjustments are coherent with the product distributed.
3. The blades were installed correctly in relation to the direction of rotation of the discs: see item 6.8.
4. The correct funnel is being used: See item 6.3.

Vibration or strange noises can be heard. Check whether:

1. The driveshaft is universal joint crosses show wear and excessive play, whether they have been lubricated regularly, and whether they are properly fastened.
2. There is excessive deflection in the conveyor belt or transmission chains.
3. Bolts, nuts, disc blades and other components are properly fastened.
4. There are foreign objects inside the tank.
5. The conveyor belt axle bearings are properly fastened.
6. The driveshaft ends are misaligned: see item 5.2.

The fuse bolts on the conveyor axles/reducer flanges break frequently. Check whether:

1. The fuse bolts are genuine.
2. The housing holes and the fastening of the bolts are damaged.
3. If there are foreign objects in the tank, avoiding the conveyor displacement.
4. The conveyor belt tension is adjusted evenly (the same on both sides).

The gearbox and reducer present excessive heating. Check whether:

1. The oil level is correct and that the oil has been changed within the recommended interval.

When the Lancer is moved loaded, there is lateral instability. Check whether:

1. The tire inflation pressure is as recommended: see item 7.6.
2. The travel speed is compatible with the traffic conditions.
3. The carried load is not above the recommended volumetric capacity.
4. The wheels (rim and tire) are installed in the recommended position: see item 4.5.

We believe that with the information contained in this manual, you, the user, should be able to resolve all your questions about the Lancer Organico clarified.

If, however, unforeseen events occur, we recommend that you seek assistance from the nearest Dealer. If necessary, he will request aid from Jan's Technical Assistance, which will be available to solve problems as fast as possible.
Some explanations about Warranty and replacement parts are provided below.

Ways to contact Jan:

See the contact information on the back cover of the manual.

9.1 - Spare parts

When replacing parts on the Lancer, use only genuine Jan parts, which are properly designed for the product to meet strength and fit requirements, so as not to impair the equipment functionality. In addition, using genuine replacement parts preserves the customer's warranty rights.

When ordering them from your dealer, always provide the Lancer manufacturing number indicated on the serial number plate (1).

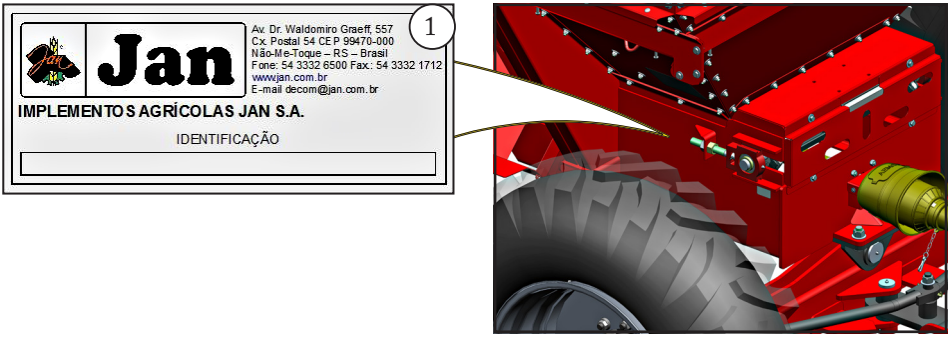

9.2 - Jan Warranty Term

The Warranty term, expressed herein, is the Dealers' responsibility towards their Client. It shouldn't, therefore, be used as an understanding instrument between the Client and Manufacturer.

The conditions below are basic and will be considered whenever a dealer submits to Jan's judgment a Warranty request.

1. Jan warrants this product only to the original purchaser, for a period of 6 (six) months, from the date of delivery.
2. This Warranty covers exclusively workmanship and material defects, being labor, freight and other expenses not covered by this Certificate, as they are the Dealer's responsibility.
3. Any attachments which have not been exclusively manufactured by us will not be covered by this Warranty term and their warranty claims should be sent to their respective dealers or manufacturers.
4. The Warranty will be voided when it is found that the defect or damage resulted from improper use of the equipment, failure to observe the instructions or operator inexperience.
5. The Warranty will also be void if the product is repaired or altered in a workshop or by mechanics that do not take part in our dealer network.
6. Also excluded from the Warranty are parts or components that present defects originating from the improper application of other non-genuine parts or components applied to the product by the user.
7. Products that suffer neglect of any type, to an extreme degree, such that their safety has been affected, are also excluded from the Warranty, according to the judgment of the company, whose decision, in such cases, is final.
8. Manufacturing and/or material defects covered by this Warranty shall under no circumstances constitute grounds for cancellation of the purchase and sale agreement or for compensation of any kind.

NOTE:

Implementos Agrícolas Jan S.A. reserves the right to introduce changes in the designs and/or make improvements to its products without incurring any obligation to make such changes to products manufactured previously.

IMPLEMENTOS AGRÍCOLAS JAN S/A

Management: Senador Salgado Filho Street, 101

Factory: Av. Dr. Waldomiro Graeff, 557 - P.O. Box 54

Phone: +55 54 3332-6500

Email: decom@jan.com.br

CNPJ: 91.495226/0001-66

ZIP Code: 99470-000 - Não-Me-Toque - RS/BRAZIL

Site: www.jan.com.br

Code of Publication: 200000004778

Edition: 01

Date: 11/2026